Volume 20 Issue 44
Originally issued as B11



Global Journal of Management and Business Research: B
Economics and Commerce
Volume 20 Issue 11 Version 1.0 Year 2020
Type: Double Blind Peer Reviewed International Research Journal
Publisher: Global Journals
Online ISSN: 2249-4588 & Print ISSN: 0975-5853

Service Quality and Customer Satisfaction in Banking Sector during COVID-19 – An Empirical Analysis of Sri Lanka

By Hussaien A. S. A. A, Sivathmajasarma. J, Abeysekara A. M. K,
Hansani H. L. U, S. Thelijjagoda, & W. D. N. Madhavika

Abstract- The study is an out breaking study in the context of COVID - 19; since this examined the gap between customer perception and service quality of banking sector of Sri Lankan during the COVID-19. As community spread of the coronavirus (COVID-19) proliferates, alternatives to in-person banking and physical exchanges are looking more and more attractive. Further; the World Health Organization (WHO) has advised people to use contactless payment and avoid handling banknotes as much as possible, since the coronavirus may continue to live on banknotes for days, accelerating spread of the disease (World Health Organization, 2020). The study employed the SERVQUAL model (Parasuraman et al. 1985), which is used to measure customer satisfaction, and the effect of these dimensions (tangibles, responsiveness, empathy, assurance and reliability, access) on customer satisfaction was measured. For each dimension how the banks had ensured the quality during the pandemic was identified using primary and secondary sources and its relationship to the customer satisfaction was empirically tested.

Keywords: *COVID-19, customer satisfaction, banking service, servqual.*

GJMBR-B Classification: *JEL Code: M29*



Strictly as per the compliance and regulations of:



© 2020. Hussaien A. S. A. A, Sivathmajasarma. J, Abeysekara A. M. K, Hansani H. L. U, S. Thelijjagoda, & W. D. N. Madhavika. This is a research/review paper, distributed under the terms of the Creative Commons Attribution-Noncommercial 3.0 Unported License http://creativecommons.org/licenses/by-nc/3.0/), permitting all non-commercial use, distribution, and reproduction in any medium, provided the original work is properly cited.

Service Quality and Customer Satisfaction in Banking Sector during COVID-19 – An Empirical Analysis of Sri Lanka

Hussaien A. S. A. A [α], Sivathmajasarma. J [σ], Abeysekara A. M. K [ρ], Hansani H. L. U [ω], S. Thelijjagoda [¥], & W. D. N. Madhavika [§]

Abstract- The study is an out breaking study in the context of COVID-19; since this examined the gap between customer perception and service quality of banking sector of Sri Lankan during the COVID-19. As community spread of the coronavirus (COVID-19) proliferates, alternatives to in-person banking and physical exchanges are looking more and more attractive. Further; the World Health Organization (WHO) has advised people to use contactless payment and avoid handling banknotes as much as possible, since the coronavirus may continue to live on banknotes for days, accelerating spread of the disease (World Health Organization, 2020). The study employed the SERVQUAL model (Parasuraman et al. 1985), which is used to measure customer satisfaction, and the effect of these dimensions (tangibles, responsiveness, empathy, assurance and reliability, access) on customer satisfaction was measured. For each dimension how the banks had ensured the quality during the pandemic was identified using primary and secondary sources and its relationship to the customer satisfaction was empirically tested. The study adopted positivistic philosophy with a deductive approach. Using a self-administered questionnaire (with 22 items), a survey was conducted having considered 400 respondents in the sample having adopted random sampling technique who use both private and public banking services. The sample represented 56% clients using public banking services and 44% using private banking services. The sample data were statistically analysed through SPSS program using the analytical technique multiple linear regression. The results illustrated that SERVQUAL Dimensions had positive impact on the customer satisfaction. The findings suggest that reliability and empathy has been the most important factors that has been influencing the customer satisfaction during the COVID-19 period. Therefore, findings suggest that the customers have been keener on the intangible, timely and quality service provided by the bank rather than being mindful on the attractive, tangible physical presence of the banks during the COVID-19, which is reasonable.

Keywords: COVID-19, customer satisfaction, banking service, servqual.

I. Introduction

After being adversely affected by the Easter Attack in April 2019, the Sri Lankan economy was on track for a steady recovery towards the year 2020. The COVID-19 pandemic, which emerged in Wuhan, China, spread rapidly throughout the world and caused global lockdowns. In March 2020, curfew was imposed throughout the country which resulted in the standstill of the majority of economic activities.

In providing liquidity and relief to all businesses and individuals, the banking sector remains a vital component of the economy, as multiple shocks being absorbed by the country are growing in immensely over time. Although we expect the banking system to be strong enough to this COVID-19 crisis, as it has been in the past through the country's numerous other crises, we cannot estimate the unusual situation in which COVID-19 has affected the world as a whole.

At the end of 2019, the sector continues to focus on large banks, namely Domestic Systemically Significant Banks (D-SIBs), consisting of BOC, PB, COMB and HNB representing 53.8% of industry assets, with the two state banks (BOC and PB) accounting for 34.2% of total industry assets. The Sri Lankan banking industry, with a total asset base as of 31 December 2019, LKR 12,522.7 Bn (USD 69.2 Bn[2]) and a net loan portfolio of LKR 7,922.9 Bn (USD 43.7 Bn[2]) have come under tremendous strain as the pandemic proliferates around the world and impacts diverse industries. The banking sector in Sri Lanka is mainly exposed to the sectors of consumption, construction, wholesale and retail trade and manufacturing, which accounted for 18.4%, 15.6%, 14.2% and 10.6% of the total loans disbursed. Correspondingly in 2019 (KPMG, 2020).

Growing recognition of consumers and their interests, shifting demand, and strong competitiveness in the banking industry need continuous improvement in the bank's standard of service to please its consumers. Several studies have analyzed the impact banks have on consumer satisfaction with the service level. In Sri Lanka, the strong rivalry between commercial banks to gain and keep sustain, they are adopting various approaches to improve customer loyalty, which is very necessary for the success of banks. However, the lack of analytical data related to the impact of the quality of service on consumer loyalty, especially consumers who were carrying accounts in both sector banks, inhibits the overview of new approaches to increase the quality of service and optimize customer satisfaction (Anjalika & Priyantha, 2018).

Author α σ ρ ω¥§: SLIIT Business School, 10115, New Kandy Road, Malabe, Sri Lanka. e-mail: athieque.97@gmail.com

© 2020 Global Journals

The research thus attempted to investigate the impact of the standard of service on consumer satisfaction. The research would help bank managers determine what kinds of variables are highly effective in increasing customer satisfaction, their shortcomings and helping to take remedial steps to boost customer satisfaction that contributes to better service quality in the banking sector (Anjalika & Priyantha, 2018).

II. Objective

The main objective of the study is to determine the Service Quality and Customer Satisfaction in Sri Lankan banking sector during COVID-19.

III. Literature Review

Service quality in banks consists of two sections, as technological service quality and service quality. In technological service quality, the banking service needs a computer system or machines to operate their services. That includes ATMs, telephone banking, mobile banking, Short Message Service (SMS) banking, internet banking, and online payment (Dimitriadis & Kyrezis, 2008; Chris & Hsieh, 2006; Zhu, et al., 2002). Good technology-based services become the key pillar in increasing the customer satisfaction and reputation (Kumar & Mittal, 2015). Both the private and public sectors are given more technological service to the customers to attract the customers and considered as provision of positive perceptions for their customers about that organization. Service quality can be described as the variation between the customer assumption of service and customer awareness of the actual service achievement. The concept of service quality is a multidimensional occurrence that includes several scopes that make up the theory (Parasuraman, et al., 2002).

Five dimensions of service quality; tangibility, reliability, assurance, responsiveness, empathy. Reliability is the ability of a company to deliver promising services in a specific and reliable way. Responsiveness is the company's top priority for helping clients and providing prompt service. Tangibles are the presence of the company's communication tools, facilities, equipment and staff. The Assurance is the ability to express information, knowledge, courtesy, and trustworthiness to the employees of the company and empathy is individual attention, careful look provides customers (Felix, 2017; Hussein & Hapsari, 2015; Ushantha, et al., 2014; Girish & Harish, 2013; Piason, et al., 2013; Peter & Vassilis, 1997). According to Sudesh (2007), stated that the deprived service quality in public area banks are mostly because of the lack of tangibility assets, as well as a shortage of Quick and positive responses and understanding and empathy. On the other side, private area banks were initiated to be more developed in this respect. Generally, overseas banks were comparatively close by to their clients' hopes in time of the numerous extents of service quality. Strong positive single linear correlation between individual service quality dimensions with customer satisfaction (Ushantha, et al., 2014). The strong link between customer satisfaction and customer perception (Girish & Harish, 2013).Among the service quality and customer satisfaction have a strong positive linear relationship in Sri Lankan banks (Ushantha, et al., 2014).

The SERVQUAL model, one of the most regularly used models for measuring service quality (Yapa & Hasara, 2013). Grouping of the model SERVQUAL and SERPERF can prove empirically to the extent the service quality in the banking trade, Study shown on a bank in America. Shaped a tool to measure the excellence of service at a bank, identified as BANKSERV containing dimensions: staff conduct, credibility, communication, and Access to teller service (Affandi, et al., 2016).

Customer satisfaction, service quality, customer loyalty, corporate image, service facility and accessories, convenience and supporting services are mostly affected by customer satisfaction and perception about the banking sectors (Sivanandamoorthy, 2012). Improving service quality and customer satisfaction is the key differentiator in competing more successfully in the banking sector in Sri Lanka (De Silva, 2009). Customer satisfaction and service quality have a strong positive relationship (Parasuraman, et al., 2002). Providing service quality leads to customer satisfaction, customer loyalty, new customer attraction, increase market shares and profitability for the banking sector (Kumari, 2011). As service quality improves and customer satisfaction increases, customer loyalty, customer retention, relationship marketing, positive word of mouth and increase customer tolerance increase the likelihood of customer satisfaction (Newman, 2001; Mark & Luiz, 1995). when the quality of service improves, customer satisfaction increases, thereby strengthening the relationship between banks and the customer (Thangapandi & Gobinath, 2016). Increasing customer satisfaction and then, increasing customer retention, creating a relationship between user and provider, increasing customer tolerance and word of mouth advertising.

a) *The Conceptual Model*

Service Quality (SERVQUAL), generally referred to as the service quality model developed by Parasuraman et al. (1985), is used as a conceptual method to define, from the perspective of clients, the effect of service elements and customer satisfaction. There are five main aspects of the model, such as Reliability, Assurance, Tangibles, Empathy and Responsiveness.

© 2020 Global Journals

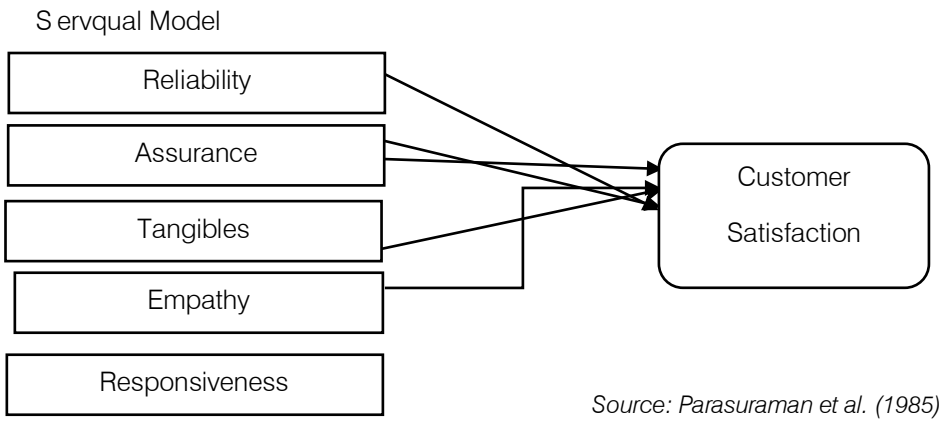

Source: Parasuraman et al. (1985)

Based on the SERVQUAL module the following hypotheses were derived.

H1: There is a positive impact of "empathy "on customer satisfaction in the commercial banking industry during COVID 19.

H2: There is a positive impact of "reliability" on customer satisfaction in commercial banking industry during COVID 19.

H3: There is a positive impact of "responsiveness" on customer satisfaction in commercial bank industry during COVID 19.

H4: There is a positive impact of "assurance" on customer satisfaction in commercial bank industry during COVID 19.

H5: There is a positive impact of "tangibles" on customer satisfaction in commercial bank industry.

H6: There is a positive impact of overall service quality on customer satisfaction in commercial bank industry during COVID 19.

IV. Methodology

a) Research strategy

Quantitative research is characterized as a systematic investigation of a specific objective to measure and interpret data in order to obtain results (Apuke, 2017). In order to decide whether the hypothesis or the theory holds true, Creswell describes quantitative analysis as an examination of social or human problem based on evaluating a hypothesis or a theory composed of variables, calculated with numbers, and evaluated with statistical procedures. The study adopted the quantitative approach in the study.

b) Data

The study consists of data from both primary and secondary sources. To collect the primary data a self-administered questionnaire was circulated among 400 respondents having adopted the cluster sampling technique which included customers from both private and public banking sectors.

c) Analytical Tool and technique

The analytical tool used in the study is SPSS and the technique used for the analysis is multiple regression. Multiple linear regression models were used on the elements of service quality against customer satisfaction to represent the collected data and interpret the relationship between the outcome variable and forecasting or predictive variables. As follows, the equation is explained.

$$CS_i = \beta 0 + \beta 1TAN1 + \beta 2EMP2 + \beta 3RES3 + \beta 4REL4 + \beta 5ASS5$$

CS -Customer Satisfaction
TAN – Tangibles
EMP – Empathy
RES – Responsiveness
REL- Reliability
ASS- Assurance

V. Reliability Analysis

As survey data is used for analysis, the reliability of internal accuracy needs to be documented. The most common reliability measure is the alpha value of Cronbach, which was used to assess whether the internal instruments were reliable (Cho 2016; Cron bach 1951). A reliability coefficient greater than 0.6 usually suggests that there is substantial accuracy (Hirata 2019; Tsai 2014).The study used Cronbach's alpha to determine internal accuracy, or the reliability estimate, indicating the degree to which items evaluate various aspects of the same term, and found an reasonable value greater than or equal to 0.6. The findings showed that these six dimensions were appropriate and could be used in this study to describe the service quality of private and public bank.

© 2020 Global Journals

Table 1: Reliability Statistic *Source:* Authors' calculation

Dimensions	Scale Mean if Item Deleted	Scale Variance if Item Deleted	Corrected Item-Total Correlation	Cronbach's Alpha if Item Deleted
TAN	19.3381	7.579	.755	.947
ASS	19.3815	6.996	.837	.937
REL	19.3683	6.815	.844	.937
RES	19.3371	6.710	.850	.936
EMP	19.3677	6.677	.868	.934
CS	19.3146	6.798	.886	.931

VI. Results and Discussion

In Sri-Lankan context mainly there are two commercial banks available one is public banks and other one is private banks. In the sample 44% were customers of private banks and 56% were customers of public banks.

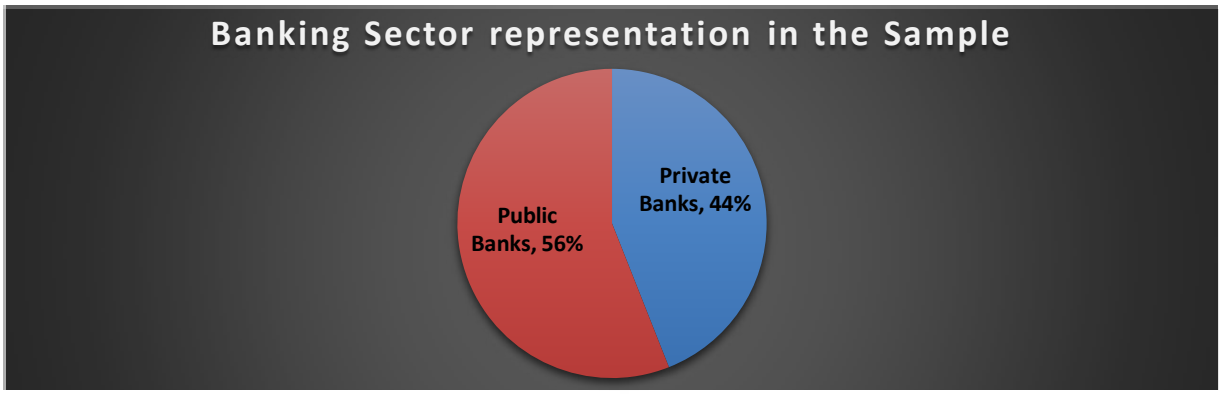

Authors' Compilation (2020)

Figure 1: Banking Sector representation in the Sample

A majority of respondents are from Colombo region in public bank sector (63.4% that's mean 144 responses) and also in private bank sector also Colombo region response are majority of response (68% which means 119 response). Other respondents are from various districts, Anuradhapura, Ampara, Badulla Batticaloa, Galle, Gampaha, Hampanthota, Kalutara, kandy, kurunagale, kegalle, mateale, matara, Monaragala, Killinochi, Jafna, Mullaitiu, polanaruwa, Putalam, Ratnapura, Trincmalee, Vavuniya, Nuwara Eliya are those districts.

a) Multiple Regression analysis

Regression analysis was performed in order to test the impact of five dimension of the service quality on the customer satisfaction. The Table 1 illustrates the model summary for multiple regression.

Table 1: Model Summary

Model Summary									
Model	R	R Square	Adjusted R Square	Std. Error of the Estimate	Change Statistics				
					R Square Change	F Change	df1	df2	Sig. F Change
1	.890[a]	.792	.790	.27069	.792	300.861	5	394	.000
a. Predictors: (Constant), Emp, Tang, Assu, Reliability, Resp									

Source: Authors' compilation

According to the model summary, 79% of the variation in the customer satisfaction is explained by the independent variables namely assurance, tangibility, responsiveness, empathy and reliability of the service quality of the banks. The p value is also less than 0.05 and therefore, it could be concluded that the model is of best fit.

© 2020 Global Journals

In the case of each independent variables, all the independent variables are having the impact on the customer satisfaction. This is evident from the following Table 2.

Table 2: Coefficient

Coefficients[a]										
Model		Unstandardized Coefficients		Standardized Coefficients	t	Sig.	95.0% Confidence Interval for B		Correlations	Collinearity Statistics
		B	Std. Error	Beta			Lower Bound	Upper Bound	Zero-order	Statistic VIF
1	(Constant)	.067	.111		.609	.543	-.150	.285		
	TAN	.187	.041	.157	4.551	.000	.106	.268	.727	2.249
	ASS	.089	.043	.087	2.048	.041	.004	.174	.766	3.386
	REL	.323	.039	.334	8.208	.000	.246	.401	.824	3.141
	RESP	.167	.041	.177	4.037	.000	.086	.248	.791	3.667
	EMP	.228	.043	.241	5.320	.000	.144	.312	.816	3.904
a. Dependent Variable: CS										

Source: Authors' compilation

The first factor that influence the customer satisfaction is reliability ($p<0.05$, $t = 8.208$). The second influencing factor on the customer satisfaction of the banks in Sri Lanka is empathy ($p<0.05$, $t = 5.320$). The third factor is tangibility ($p<0.05$, $t = 4.551$). The fourth factor influencing customer satisfaction is responsibility which is with $p<0.05$, $t = 4.037$. The fifth factor that influence the customer satisfaction is assurance dimension ($p<0.05$, $t = 2.048$).

According to Table 2, above, the variance inflation factors (VIF) values are less than ten and therefore, there is no serious multicollinearity issues with the independent variables under study.

CS (Customer Satisfaction) = 0.067+0.187 (Tangibility) + 0.089 (Assurance)+ 0.323(Reliability)+ 0.167 (Responsiveness)+ 0.288 (Empathy).

The hypotheses were tested and the results are given in Table 3 below.

Table 3: Descriptive Statistics.

Hypotheses	status
H1: There is a positive impact of "empathy" on customer satisfaction in the commercial banking industry.	Accepted
H2: There is a positive impact of "reliability" on customer satisfaction in commercial banking industry.	Accepted
H3: There is a positive impact of "responsiveness" on customer satisfaction in commercial bank industry.	Accepted
H4: There is a positive impact of "assurance" on customer satisfaction in commercial bank industry.	Accepted
H5: There is a positive impact of "tangibles" on customer satisfaction in commercial bank industry.	Accepted
H6: There is a positive impact of overall service quality on customer satisfaction in commercial bank industry.	Accepted

Source: Authors' compilation

VII. Discussion and Conclusion

The objective of the study was to examine the impact of elements of the service quality on the customer satisfaction of banking sector Sri Lanka during the COVID-19. The study used the SERVQUAL model which includes five dimension of service quality such as empathy, reliability, responsiveness, assurance and tangibility. The findings suggest that all five dimensions of the service quality positively impact on the customer satisfaction in both private and public banks in Sri Lanka during the COVID-19 period. Despite the fact that the model include all five variables, reliability is the factor that influences the customer satisfaction during the

© 2020 Global Journals

COVID-19 period. Therefore, management should focus on improving the reliability dimension of the banking services more during tough times like pandemic. The second factor influencing on the customer satisfaction is empathy dimension. Hence, private and public banks should attempt to enhance the empathy dimension of the service quality. Hence, it is important for the banks to care the customers individually and it is always good to improve the online banking services to the customers. The next factor that influence customer satisfaction of the banks is tangibility. Banking industry should look into the matters associated with tangibility of the service. This needs to be further improved. Here, physical facilities at the banks, communication materials, equipment and personnel should be considered. Other factors that influence on the customer satisfaction are responsibility and assurance. In the case of responsiveness, employees at the banks should be ready to help instantly to the customers. Therefore, they should be knowledgeable in the banking services. Thus, banks may invest more on the training for their employees in future. The last factor that is having an impact is assurance. This means that employees should have courtesy and the ability to build trust for the customers.

This study aids decision makers in the banking industry by providing insights into factors influencing the customer satisfaction during the COVID-19 period. Management may attempt in investigating what aspects of the service quality could further be improved and thereby private and public banks can make the customers happy.

A limitation in the study has been the quantitative approach considered in the study. For the future researchers it is recommended to considered both quantitative and qualitative aspects when conducting the same study which will improve the accuracy of the findings through triangulation. Further similar studies are recommended to conduct in other geographical locations to determine whether the customers have been valuing the same quality dimensions in the banking sector as per the findings during the pandemic.

References Références Referencias

1. Abd- Elrahman, A. (2017). A Review of Telecommunications Service Quality Dimensions. Sch J Appl Sci Res, 1(1), 10-18.
2. Abratt, R. & Russell, J. (1999) Relationship marketing in private banking in South Africa. International Journal of Bank Marketing, 17(1), pp. 5-19.
3. Affandi, Suhidayat, T. & Azhar. (2016) Service Quality on customer Value: perspective from Rural Banking Sectors in Bandung, Indonesia. Bandung, Indoesia: International journal of Academic Research in Business and Social Sciences.
4. Anjalika, W. P. & Priyantha, H. M. (2018) Effect of Service Quality on Customer Satisfaction: An Empirical Study of Customers who have Bank Accounts in both Public and Private Banks in Sri Lanka. International Journal of Marketing and Technology, 01 January, 8(1), pp. 11-36.
5. Bahia, K. & Nantel, J. (2000) a reliable and valid measurement scale for the perceived service quality of banks. International Journal of Bank Marketing, 18(2), pp. 84-91.
6. Cheng, L. B. & Rashid, M. Z. (2013) Service Quality and the Mediating Effect of Corporate Image on the Relationship between Customer Satisfaction and Customer Loyalty in the Malaysian Hotel Industry. Gadjah Mada International Journal of Business, 15(2), pp. 99-112.
7. Cho, E.: Making reliability reliable: a systematic approach to reliability coefficients. Organ. Res. Methods 19(4), 651–682 (2016). https://doi.org/10.1177/109442811665623
8. Chris, J.-S. L. & Hsieh, P.-l. (2006) the role of technology readiness in customers' perception and adoption of self-service technologies. International Journal of Service Industry Management, Volume 17, pp. 497-517.
9. Christine, E. T. & Martin, B. R. (1996) the Impact of Service Quality and Service Characteristics on Customer Retention: Small Businesses and their Banks in the UK. British Journal of Management, 7(3), pp. 219-230.
10. Cronbach, L. J.: Coefficient alpha and the internal structure of tests. Psychometrika 16(3), 297–334 (1951). https://doi.org/10.1007/BF02310555
11. De Silva, V. (2009) Unleash potential through effective service quality determinants. Bouncing back: opportunities unleashed: the 21st anniversary convention of Association of Professional Bankers, pp. 147-158.
12. Dimitriadis, S. & Kyrezis, N. (2008) Does trust in the bank build trust in its technology based channels. Journal of financial services marketing, Volume 13, pp. 28-38.
13. Felix, R. (2017) Service Quality and Customer Satisfaction in Selected Banks in Rwanda. Journal of business & financial affairs, 6(1), pp. 1-11.
14. Girish, N. K. & Harish, N. K. (2013) A study on customer perception on service quality in commercial banks: An empirical study. ZENITH International journal of multidisciplinary research, 3(7), pp. 35-47.
15. Hirata, E.: Service characteristics and customer satisfaction in the container liner shipping industry. Asian J. Shipp. Logist. 35 (1), 24–29 (2019). https://doi.org/10. 1016/j.ajsl.2019.03.004

© 2020 Global Journals

16. Hussein, A. S. & Hapsari, R. (2015) Customers perceptions of service quality dimensions in the indonesian banking industry: An empirical study. journal of indonesian economy and business, 30(1), pp. 17-29.
17. Kumari, R. (2011) Customer perception of service quality in the retail bnking sector. European journal of business and management, 3(3), pp. 299-306.
18. Kumar, R. & Mittal, A. (2015) Customer satisfaction and service quality perception of technology based banking services; A study on selected public sector banks in india. Global journal of management and business research; E marketing, 15(5), pp. 39-45.
19. Mark, G. & Luiz, M. (1995) The effects of free banking on overall satisfaction: the use of automated teller machines. International Journal of Bank Marketing, 13(4), pp. 33-40.
20. Newman, K. (2001) Interrogating SERVQUAL: a critical assessment of service quality measurement in a high street retail bank. International Journal of Bank Marketing, 19(3), pp. 126-139.
21. Parasuraman, A., Zeithaml, V. & Berry, L. (2002) SERVQUAL: a multiple-item scale for measuring consumer perceptions of service quality. journal of retailing, 64(1), p. 140.
22. Parasuraman, A., Zeithaml, A. V. & Berry, L. L. (1985) A Conceptual Model of Service Quality and Its Implications for Future Research. The Journal of Marketing, 49(4), pp. 41-50.
23. Peter, K. & Vassilis, V. (1997) Private and public banks: a comparison of customer expectations and perceptions. International journal of bank marketing, 15(7), pp. 279-287.
24. Piason, V. et al. (2013) Significance of service quality and customer satisfaction in Zimbambwe's banking sector. European journal of business and management, 5(13), pp. 253-260.
25. Saleem, H. & Sarfraz, R. N. (2014) The impact of service quality on customer satisfaction, customer loyalty and brand image: Evidence from hotel industry of Pakistan. Middle East Journal of Scientific Research, 19(5), pp. 706-711.
26. Sivanandamoorthy, S. (2012) Service quality and customer satisfaction: A case study - banking sectors in Jaffna district, Sri Lanka. International Journal of Marketing, 1(10), pp. 1-9.
27. Sudesh, K. (2007) Service quality in banks-a study in Haryana and Chandigarh. Nice journal of business, 2(1), pp. 55-65.
28. Thangapandi, G. & Gobinath, K. (2016) A study on customer service quality of banks in Tamilnadu. Indian journal of research, 5(5), pp. 61-65.
29. Ushantha, C., Wijeratne, A. W. & Samantha, K. P. (2014) Customers perception on service quality towards satisfaction: An Application of SERVPERF in state sector banks in sri lanka. European journal of business and management, Volume 6, pp. 72-81.
30. Ushantha, C., Wijeratne, A. W. & Samantha, K. P. (2014) Customers perception on service quality towards satisfaction: An Application of SERVPERF in state sector banks in sri lanka. European journal of business and management, 6(4), pp. 72-81.
31. Yapa, S. & Hasara, K. M. (2013) Bank service quality in Sri Lanka: A comparative study between public and private sector. Kuala Lumpur, Malaysia,: 3rd Asia-Pacific business research conference.
32. Zhu, F. X., Walter, W. & Chen, I. (2002) IT-based services and service quality in consumer banking. International Journal of Service Industry Management, Volume 13, pp. 69-90.

© 2020 Global Journals