Volume 19 Issue 42
Originally issued as A14



Global Journal of Management and Business Research: A Administration and Management
Volume 19 Issue 14 Version 1.0 Year 2019
Type: Double Blind Peer Reviewed International Research Journal
Publisher: Global Journals
Online ISSN: 2249-4588 & Print ISSN: 0975-5853

Factors Influencing Operational Effectiveness in the Zambian Copper Mining Industry

By M.K. Banda, C. Sichinsambwe & J.M. Tembo
The Copperbelt University

Abstract- The mining industry, in recognizing human resources as a vital production factor, simultaneously accepted the concept of knowledge sharing as a crucial factor in employees' contribution to operational effectiveness. Whereas mining companies in developed nations responded positively to recent changes in metals market, the Zambian mining sector's response to local workforce shortages was weighed down with inadequacy. This study was undertaken specifically to examine the effects of knowledge sharing behaviour, organizational, and individual factors using data obtained from a cross-sectional survey conducted at five operating mines. Data analysis by means of structural equation models revealed weak impacts of knowledge sharing behaviour and significant positive impacts of organizational and individual factors. The overall conclusion suggests that the mining industry consider de-emphasizing the use of extrinsic rewards in favour of intrinsic rewards, as workers' mind-sets are inclined that way.

Keywords: knowledge sharing, workforce shortage, extrinsic rewards, intrinsic rewards.

GJMBR-A Classification: JEL Code: M19



Strictly as per the compliance and regulations of:



© 2019. M.K. Banda, C. Sichinsambwe & J.M. Tembo. This is a research/review paper, distributed under the terms of the Creative Commons Attribution-Noncommercial 3.0 Unported License http://creativecommons.org/licenses/by-nc/3.0/), permitting all non-commercial use, distribution, and reproduction in any medium, provided the original work is properly cited.

Factors Influencing Operational Effectiveness in the Zambian Copper Mining Industry

M.K. Banda [α], C. Sichinsambwe [σ] & J.M. Tembo [ρ]

Abstract- **The mining industry, in recognizing human resources as a vital production factor, simultaneously accepted the concept of knowledge sharing as a crucial factor in employees' contribution to operational effectiveness. Whereas mining companies in developed nations responded positively to recent changes in metals market, the Zambian mining sector's response to local workforce shortages was weighed down with inadequacy. This study was undertaken specifically to examine the effects of knowledge sharing behaviour, organizational, and individual factors using data obtained from a cross-sectional survey conducted at five operating mines. Data analysis by means of structural equation models revealed weak impacts of knowledge sharing behaviour and significant positive impacts of organizational and individual factors. The overall conclusion suggests that the mining industry consider de-emphasizing the use of extrinsic rewards in favour of intrinsic rewards, as workers' mind-sets are inclined that way.**

Keywords: knowledge sharing, workforce shortage, extrinsic rewards, intrinsic rewards.

I. Introduction and Background

The world of mining during the period 1995–2015 was characterized by expansion and contraction of operations owing to the growing economies of China, India, and Brazil. Mining companies recapitalized old mines while establishing new ones to meet increased commodities demand. However, mining companies were challenged by three major factors: scarcity of a skilled workforce to meet operational demands, a rapidly changing global competitive environment, and organizational paradigm shifts. These factors forced mining corporations to seek new strategies in mitigation.

The general scarcity of the required skills compelled mining companies to craft new strategies through strategic human resource planning (SHRP) and strategic workforce planning (SWFP). The mining houses perceived and acknowledged both strategies as core activities in human resource management in cooperation with government and national training institutions. Liu *et al*. (2014) noted that workforce planning (WFP) is vital for implementing SHRP. The operating mines, having experienced severe difficulties obtaining the supply of desired skills prior to the boom of 1995–2005, initially depended on recruiting expatriate staff in addition to undertaking local workforce training using national institutes. However, efforts by national training institutes were severely limited by budget, staff, and infrastructure constraints. The mines supplemented national training efforts by running in-house training activities. These represent mine efforts at SHRP and SWFP.

According to Salaman, Storey, and Bilsberry (2005) strategic human resource management (SHRM) is one of the most influential emergent ideas in business and management from which policy-makers draw ideas to promote high-performance workplaces and human capital management. In addition, Caliskan (2010) observed that human resource systems contribute to sustained competitive advantage by facilitating the development of competencies that are firm-specific. The mines caught on to the ideas of SHRM and high performance by investing in workforce training to keep pace with changing technology and increased competition. Furthermore, Koch and McGrath (1996) noted the positive and significant effects on labour productivity found in organizations that utilize more sophisticated human resource planning, recruitment, and selection strategies. Today, the mines are practicing better approaches to human resource planning activities in line and in tune with rapid technological change and globalization, which are forcing organizations to change their overall business strategy (Momin and Mishra, 2015). WFP is a strategic managerial practice that the mines are implementing to ensure a balanced workplace, as observed by Singh and Sharma (2015).

Commenting on the prevailing conditions in the mining industry GPR Dehler (2013, p. 4) observed: '*Today's mining operations are burdened with uncertainty posing severe challenges on organizational performance. As a consequence, mining companies have been forced to restructure and embrace more appropriate planning methods to address uncertainty and cost of production. By effectively managing the complexity created by changing economic trends, and many other challenges they face, such as skill shortage and demographic shifts, mining companies can create competitive advantage whilst positioning themselves to survive and prosper for the long term. The mining industry has failed to do so, as it faces more complexity than most industries and it has failed to equip itself properly to deal with the complexity since the industry*

Author α: School of Information and Communication Technology. e-mail: matthewkbanda9@gmail.com
Author σ: School of Business.
Author ρ: School of Graduate Studies, The Copperbelt University, Kitwe, Zambia.

© 2019 Global Journals

has looked through the same lens for years, and this must change. 'This observation is generally true for the mining corporations operating in Zambia. Slowly, technological changes have trickled in and better human resource management approaches have been adopted to suit the local working environment.

Schwen *et al.* (1998) presented a different view by describing three aspects of knowledge management (KM) that have the potential to enhance human performance in organizations: investment in human capital, information solutions, and unconfined learning. According to Wright, (2008) globalization has changed the business landscape, prompting many companies to manage their assets as effectively as possible – especially their human assets. Consequently, KMis recognized as the major key to dealing with continual changes taking place. Itami (1987) and Sveiby (1992) identified knowledge as a widely recognized key to organizations' ability to create competitive advantage. Furthermore, Drucker (1993) noted that the period 1990 to 2000 is characterized by the shift of traditional production factors, which used to be capital, land, or labour, to the only meaningful resource that can lead to social and economic results, which is knowledge. Alvesson, (1995) also observed that knowledge has a more important role than all the other production factors, such as capital and labour. Scholars such as Drucker (1993), Grant (1996), and Spender (1996) recognized the importance of knowledge as a strategic resource. Knowledge appears to be the only corporate intangible resource that provides a sustainable competitive advantage (Grant, 1996; Rumelt, 1974).

The mining industry is no exception to the use of KM practices. Much of the work activity is knowledge-based, with college and university graduates making up approximately 25% of the total direct mining industry workforce. In this respect, Bryant (2011) observed that investment in systems and technology to support knowledge acquisition and planning has been minimal. Insufficient investment in and slow uptake of KM practices imply that in general, the mining industry requires extraordinary internal forces to motivate high levels of innovation in operations.

Given the foregoing observations, in this paper we present part of an ongoing research project exploring how mining operations in Zambia have responded to organizational challenges posed by WFP and KM during the period 2005 to 2015. The aim is to suggest better ways of reducing workforce constraints on operational effectiveness. In this regard, we review developments that have taken place in HR and KM. In addition, the underlying theory is explained, followed by a description of the research design and methods used in data collection and analysis. Finally, the paper reports the findings, draws conclusions, and makes recommendations for the mining industry to consider.

II. Developments in HR and KM

During the period 2005–2015 the mining industry faced many challenges that needed addressing to ensure operational effectiveness.The significant challenges included unprecedented demographic shifts, widening talent gaps, and booming demand in an increasingly competitive global market. The identified emerging top trends in the sector and the suggested alternative strategies included bridging the talent gap, bringing costs under control, and developing a framework for improved collaboration as a way to streamline global operations, handling regulatory hurdles, and strengthening both government and community relations (Accenture, 2012; Anglo Gold Ashanti, 2012; Deloitte, 2012).

Realizing the effects of change, developed nations with significant mining sectors reacted by focusing on workforce planning (Accenture, 2011). In 2010 the Canadian Mining Industry Human Resource (MiHR) Council undertook a study on strategic workforce planning in the mining industry, funded in part by the Canadian government. The research highlighted the importance of planning in the mining sector, as the industry has a great impact on society and the national economy. The purpose of the MiHR 2010 Council Report was to support proactive WFP in the Canadian mining industry to mitigate the effects of the economic cycle, shifting demographics, ageing workforce, and skills gaps. Sadly, in the case of the Zambian mining industry the relationship between government and the mining corporations is not conducive to similar mutual collaboration on workforce issues. Taxation policies and suspected corrupt practices by government officials are among the major stumbling blocks.

In response to a serious labour shortage experienced across all industries in Australia, in 2010the Department of Training and Workforce Development commissioned the Resource Industry Training Council to undertake research and prepare industry workforce development plans for the mining industry in Western Australia. The skills shortages threatened to constrain economic development and prevent Western Australia from reaching its full economic potential. The plan was designed to assist Western Australia with developing a training policy and a workforce plan to avoid movement of people from other industries and other parts of Australia. A similar development in Zambia was the opening up of the Northwestern region to mining, spearheaded by First Quantum Minerals. The corporation came up with a workforce plan to reduce the movement of people from other parts of Zambia by opening up a trades training institute in collaboration with government to provide locally trained artisans.

Developing nations' response to challenges has been in the form of increasing foreign direct investment (FDI) in the mining sector without considering workforce

© 2019 Global Journals

planning (Hanushek, 2013). Rasmussen and O'Keefe (2014) observed that the potential development role of the industry is clear, but its advancement is limited by the shortage of skills in and surrounding the industry. Wendelboe *et al*. (2014) also noted that FDI has a tendency to produce enclaves in host countries, with few linkages to the local economy. In Zambia, mines owned by Indian and Chinese companies have little or no linkages to the local economy, and it appears that few short-term employment opportunities are offered to the local population. According to Hanushek (2013) and Ogunade (2011), the development of human capital is a big challenge for developing nations, especially those expanding their industry base. Skills development initiatives are currently being instituted in a fragmented way, but there is a need to coordinated efforts for skills development and joint capacity-building of institutions (Rasmussen and O'Keefe, 2014).

Since the turn of the 21st century, mining operations worldwide have been experiencing challenges directly affecting organizational effectiveness. Consequently, companies have been obliged to respond to increased risks by addressing or adopting alternative approaches covering the full scope of mining, including strategies to bring costs under control, managing commodity price volatility, enhancing corporate social responsibility, and bridging the talent gap (Bryant, 2011).

Nonetheless, the apparent lack of application of strategic WFP and KM in the third-world mining industry has motivated an examination of how the two concepts are applied in Zambia. Thus the study focused on examining how mining companies in Zambia are applying strategic WFP and KM to achieve and sustain effectiveness. In the context of the study, effectiveness means organizational success with limited workforce operational constraints.

III. Theoretical and Conceptual Model

The underlying theoretical basis of the study is the theory of constraints (ToC) developed by Goldratt and Cox (1986) to identify and prevent factors inhibiting organizational effectiveness. As a consequence, organizations deliberately develop strategies that minimize or eliminate constraints on operational effectiveness. ToC measures operational performance in key areas and uses the results to reorganize its operations. Goldratt and Cox (1986) explained that, while another constraint always emerges, repeated application of ToC can result in continuous improvement, increased efficiency, and higher profits.

Nonetheless, the relevance of ToC lies in its suitability for and application to a systems approach to mining activity. Mining as a process includes input, throughput, and output phases. Of particular concern is the throughput phase which, when impeded by process factors (financial, legal, ethical, and environmental) and process mechanisms (people, knowledge, capital, and technology), places numerous operational constraints on goal achievement. The application of ToC assumes that the performance of mining organizations cannot improve on account of some specific problems or inadequacies in WFP and KM that are holding back progress. The constraints can be found by searching for causes of undesirable effects such as employee behaviour, attitude to work, insufficient skills availability, or even a poorly designed production sequence. While there may be several causes, the main constraint causes the most undesirable effects and should be dealt with first. When changes are made to remove the constraint, performance improves until another main constraint limits further improvement, requiring a repetition of the process. Consequently, ToC can be regarded as a management paradigm that views organizations as controllable systems that are restricted in goal achievement by a small number of constraints.

The main focus of the research is on mining operational effectiveness, synonymous with success at limiting workforce operational constraints on goal achievement, profitability, competitiveness *etc*. The throughput phase comprises several factors that include people, knowledge, financial, environmental, *etc*. The people factor (skills, behaviour, and attitude) alone is tied to research concepts such as WFP and KM. As a result, it has been assumed that WFP, KM, organizational and individual factors (OIF) including behaviour (BM) and attitude (CSO), affect mining operations. Furthermore, it is assumed that WFP and KM are the main antecedent measurable variables that account for effective mining operations as the consequent response variable. Concurrently, organizational, individual, behavioral, and attitudinal factors act as modifying variables. Accordingly, the elements of WFP and KM are regarded as antecedent activities leading to positive or negative consequences for mining, which are measurable and subject to statistical analyses.

IV. Methods

The research, conducted in the positivist paradigm, took the form of a cross-sectional case study of the mining industry in Zambia. It is assumed in a positivist paradigm that understanding or knowledge of a phenomenon is best acquired through objective means of observation or experimentation, and not through subjective or other means. The objective approach to the study subsumes that human experiences in the mining industry can be accessed through the definition and description of measurable dimensions in units or aggregates. In the study, defined degrees of acquiescence were used as the quantitative measures of observation for each variable under

© 2019 Global Journals

observation. A sampling frame of 6 200 out of approximately 25 000 mine employees was deemed as the core workforce (college and university technical graduates and experienced employees). According to Bartlett et al. (2001)a sample size of 120 at 95% confidence level with *alpha* being equal to or less than 0.05is deemed adequate for a sampling frame of 6 200. However, given the nature of mining work, a much larger sample of 400 respondents was selected to provide for a better and higher response rate.

Nevertheless, the mines were selected on account of the differences in ownership, background, and technology. For instance, FQM adopted new processing technology and invested heavily in open pit operations. The same is true for KCM operations at Nchanga mine. However, both MCM operations at Nkana and Mufulira opted for new underground development projects. Ultimately, the selected operations were: Africa Mineral Resources (AMR) Lubambe at Chililabombwe; FQM Kansanshi at Solwezi, Konkola Copper Mines (KCM) at Konkola, Chililabombwe, and Nchanga-Chingola; Mopani Copper Mines (MCM) at Mufulira and at Nkana-Kitwe, Chinese Non Ferrous Copper (CNFC) Minesat Chambishi; and Chinese National Copper Mining (CNCM) Company at Luanshya. FQM Kansanshi mine is in the North-western region was selected for data collection; the rest are located on the Copperbelt. Three of the selected mines withdrew from participation in the study: AMR Lubambe, CNFC Chambishi, and CNCM Luanshya, citing the prevailing economic conditions that were precipitating imminent labour retrenchments. Eventually, 280 questionnaires were distributed, with a return rate of 63% (176 questionnaires). The questionnaire developed for the study, used a seven-point Likert scale to provide more variance and the ability to detect smaller differences in responses (Cooper and Schindler, 1998).

The study used structural equation modeling (SEM) a family of statistical methods to test the research conceptual model (Kaplan 2007). Both Kaplan (2007) and Kline (2011) noted that SEM refers to a combination of two things: a measurement model that defines latent variables such as KM using one or more observed variables, such as knowledge sharing (KS) and a structural regression model that links latent variables together, as illustrated in Figure 1. The method is widely used in the social sciences because of its ability to isolate observational error from measurement of latent variables (Hancock, 2015). SEM is based on linear models and on statistical theory, and the conclusions are valid only if the assumptions are met. The model summary output and model fit are shown in Table I.

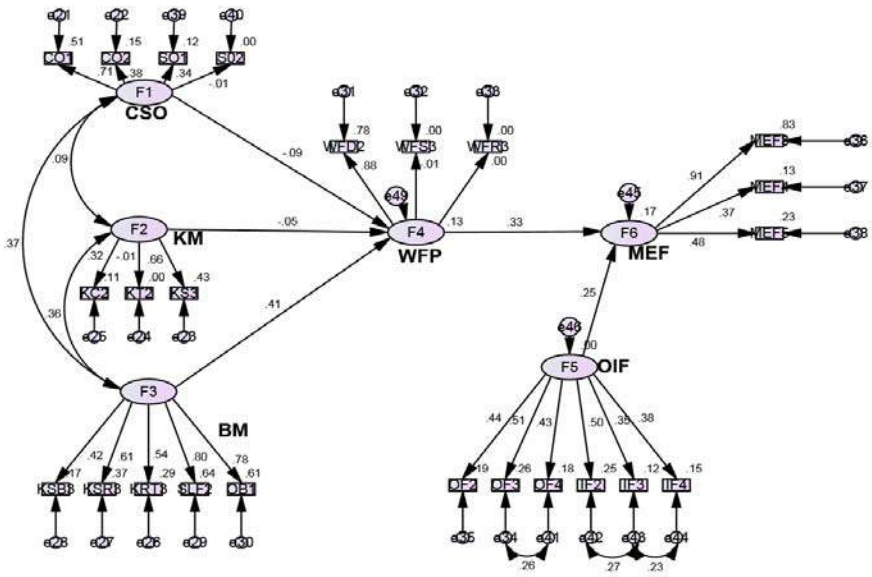

Figure 1: Conceptual and measurement model.

Table I: Model fit and output values.

Model fit values	Value	Recommended
Chi-square (CMIN) X^2	579 017	
Degrees of freedom df	255	
P-value p	.000	
X^2/df *ratio*	2.271	< 3
Adjusted goodness of fit index AGFI	.737	.80
Normed fit index NFI	.403	.90
Root mean square error approximation RMSEA	.085	.08

© 2019 Global Journals

Model output values	Regression co-eff. w	P-value
F1-->F4, CSO-->WFP	-.09	.435
F2-->F4, KM-->WFP	-.05	.681
F3-->F4, BM-->WFP	.41	***
F4-->F6, WFP-->MEF	.33	***
F5-->F6, OIF-->MEF	.25	.045

*** *Significant at 0.05 confidence level*

V. Results and Inferences

Figure 1 shows the research conceptual model of the relationships of factors constraining WFP and operational effectiveness MEF. The antecedent factors CSO (F1), KM (F2), and BM (F3) directly affect WFP (F4). Both WFP and OIF (F5) have direct consequent effects on MEF (F6). The straight outward arrows indicate standardized regression coefficients and the curved arrows indicate covariances. The square boxes represent measured variables. The estimated error variance of statistical significance is indicated on each of the measured variable if the value is greater than unity. The values indicated on each straight arrow show the regression coefficient *w*, and the curved arrows show the covariance/correlation coefficient *r*. In the following analyses r^2, the squared multiple correlation, indicates the magnitude of error effect in the measured variable.

Table I indicates the chi-square test of model fitness to the data. Poor model fitness would be indicated by recursiveness of the model. The main model output shows three significant regression coefficients for BM, WFP, and OIF as strong predictors of MEF. Furthermore, the model output indicates both CSO and KM as having no significant prediction on WFP. However, only the behavioural factor (BM) has a statistically significant prediction on WFP. In addition, both WFP (under the influence of BM) and organizational and individual factors (OIF) have significant prediction on MEF.

The analysis of CSO findings indicates the variable is under three significant internal loadings from workers' expectation of help when in need (CO1, $w = 0.71$, $r^2 = 0.51$, $p < 0.05$), workers' value addition (CO2,$w = 0.38$, $r^2 = 0.15$,$p < 0.05$), and recognition for sharing knowledge (SO1, $w = 0.34$, $r^2 = 0.12$,$p < 0.05$). The findings suggest that management should deliberately focus on incentivizing, recognizing, and rewarding improved workers' value addition to organizational work and for sharing their work knowledge and experience.

Furthermore, analysis of the KM variable indicates significant internal influence from conducive organization structure (KC2, $w = 0.32$, $r^2 = 0.11$,$p < 0.05$) and labour unrest challenge (KS3, $w = 0.60$, $r^2 = 0.43$$p < 0.05$). The results suggest management redesign the work organization structure to provide an atmosphere conducive to creativity and knowledge sharing. In addition, the findings suggest that management consider ways to minimize labour unrest through better team management.

Further examination of the internal loading of the BM variable reveals that all measured variables have significant prediction on it, based on standardized regression coefficient (*w*) and squared correlation (r^2), which signifies the amount of variation in BM. Only the extrinsic reward factor KSB ($w = 0.42$, $r^2 = 0.17$, $p < 0.05$) has the least impact compared to intrinsic reward factor KSR ($w = 0.61$, $r^2 = 0.37$) and social relational factor KRT ($w = 0.54$, $r^2 = 0.29$, $p < 0.05$). Furthermore, selflessness SLF ($w = 0.80$, $r^2 = 0.64$, $p < 0.05$) and altruistic attitude and behaviour OB ($w = 0.78$, $r^2 = 0.65$, $p < 0.05$) have significant prediction on BM. The results suggest that more managerial attention be directed to improving intrinsic rewards such as increased work responsibility and recognition of achievement, which tends to boost altruistic attitude and behaviour to the benefit of the organization. The observation appears to be at variance with the current practice of providing extrinsic rewards (such as motor vehicles *etc.*), which are of less influence on operational effectiveness.

However, the analysis of internal loading of WFP indicates significant prediction from workforce supply and availability (WFD2, $w = 0.88$, $r^2 = 0.78$$p, < 0.05$). It is inferred that workforce supply is of cardinal importance to workforce planning in an organization. Therefore, management should focus more on ensuring the supply of workforce at all times.

The examination of internal loadings of the organizational and individual factor (OIF) indicates significant influence on workforce engagement due to effects from motivation (OF2, $w = 0.44$, $r^2 = 0.19$, $p < 0.05$), labour relations (OF3, $w = 0.51$, $r^2 = 0.26$, $p < 0.05$), and trust (OF4, $w = 0.43$, $r^2 = 0.18$,$p < .005$). Furthermore, significant internal influence on work engagement from effects of morale (IF2, $w = 0.50$, $r^2 = 0.25$), commitment (IF3, $w = 0.39$, $r^2 = 0.15$, $p < 0.05$), and performance evaluation (IF4, $w = 0.38$, $r^2 = 0.1$, $p < 0.05$). The results indicate that management has much work to do to ensure that the workforce is optimally engaged with work based on organizational as well as individual factors. The findings suggest that

© 2019 Global Journals

management should appropriately address organizational factors that sustain higher employee motivation, better labour relations, and greater trust. For instance, the designing of jobs that provide learning experiences and employee participation in problem-solving and decision-making generally result in improving trust between managers and employees. In addition, management should develop programmes that improve workers' morale and commitment by using performance evaluation results to the good.

Close examination of the internal loading factors of resource availability MEF3 ($w = 0.91$, $r^2 = 0.83$,$p < 0.05$), management–union relations MEF4 ($w = 0.37$, $r^2 = 0.13$, $p < 0.05$),and supervision MEF5 ($w = 0.48$, $r^2 = 0.23$, $p < 0.05$) shows statistically significant prediction of operational effectiveness MEF. The findings imply that management should work towards improving both its relations with the union and the quality of supervision in operational work. By embarking on frequent consultation on operational issues with union representatives, understanding between the parties of what is expected of each side will improve. Most important is the frequent training of supervisory staff, not only to improve the quality of supervision but also the quality of work, morale, and commitment of every worker in the unit.

VI. Conclusions

The study has put the choice of approach on a firmer basis by highlighting suggestions to improve the influence of the significant variables impacting operational effectiveness. The most prominent among these variables are related to behaviour and organizational and individual factors. These two factors are significant external loadings on operational effectiveness. Mine managers should not lose sight of these factors as they are directly responsible for high levels of effectiveness. As a result, the overall implication is that the mining industry should de-emphasize the use of extrinsic rewards in favour of intrinsic rewards, as workers' mind-sets are inclined that way. In addition, the analyses of corporate and self-orientation suggest that management should deliberately focus on improving workers' value addition and workers' recognition for sharing their knowledge and experience. Furthermore, management should consider redesigning the work organization structure to provide an atmosphere conducive for creativity and knowledge-sharing. In addition, the results suggest that management consider ways to minimize labour unrest and direct attention to improving intrinsic rewards, which significantly boost altruistic attitude and behaviour to the benefit of the organization. However, the current practice of providing extrinsic rewards which are of less influence on operational effectiveness is at variance with the findings.

Workforce planning is generally a numbers game, but it should incorporate the influence of worker behaviour on the overall workforce plans. Organizational and individual factors are equally important in the management of workers as they directly affect workers' engagement. The analyses have shown how workforce supply is of cardinal importance to workforce planning in an organization. Therefore, management should focus more on ensuring the supply of a quality, organization-specific workforce through concerted training efforts at all times. Finally, the analyses of organizational and individual factors indicate that management has much work to do in improving workforce engagement based on each of the factors. Nonetheless, operational effectiveness internally depends on work activity, the available resources, and the nature and quality of supervision exercised.

Acknowledgements

We are grateful to the following mining corporations for providing assistance with data collection and permission to publish this work:

First Quantum Minerals plc, Solwezi

Konkola Copper Mines plc, Chingola

Mopani Copper Mines olc, Kitwe.

References Références Referencias

1. Accenture Management Consulting. (2012). Staking a claim: four talent management strategies for high performance in the mining industry Accenture 2012Annual Report.
2. Alvesson, M. (1995). *Management of Knowledge-Intensive Companies*. De Gruyter Berlin p.93.
3. AngloGold Ashanti. (2012). Careers for graduates and students. AngloGold Ashanti 2012 Annual Report.
4. Bartlett, J.E., Kotrlik, J.W., and Higgins, C.C.(2001).Organizational research: determining appropriate research sample size in survey research. *Information Technology, Learning and Performance Journal*,19 (1, 43-50).
5. Bryant, P.J. (2011). The case of innovation in the mining industry. Clareo Partners, Chicago, IL.
6. Caliskan, E. N.. (2010). The impact of strategic human resource management on organisational performance. *Journal of Naval Science and Engineering*, 6(2), pp. 100-116.
7. Clareo Partners. (2012).Insights: the imperative case for innovation in the mining industry. Chicago, IL.
8. Cooper, D.R. and Schindler, P.S. (1998). *Business Research Methods.* Irwin McGraw-Hill, Boston, MA.
9. Deloitte.(2012).Tracking the Trends 2012 www2. deloitte.com/content/dam/deloitte/co/Documents/energy-resources/11-2521%20 er mining top10 2012 en_web(678936).pdf

© 2019 Global Journals

10. Drucker P. (1993). *Post-Capitalist Society*.Harper Business, New York. p. 210.
11. Goldratt, E.M. and Cox, J. (1986).*The Goal: a Process of Ongoing Improvement*. North River Press, Croton-on-Hudson, NY.
12. GPR Dehler. (2013). Mining strategy development. San Diego, CA.
13. Grant, R.M. (1996). Prospering in dynamically-competitive environments: organizational capability as knowledge integration. *Organization Science*, 7 (4), 375–387.
14. Hancock, G..(2015). Fortunecookies, measurement error, and experimental design. *Journal of Modern Applied Statistical Methods,* 2 (2), 293–305.
15. Hanushek, P. (2013). Economic growth in developing countries: the role of human capital. Economics of Education Review, 37, 204-212. http://hanushek.stanford.edu/publications/economic-growth-developing-countries-role-human-capital
16. Itami, H. and Roehl, T.W. (1987).*Mobilizing Invisible Assets*. Harvard University Press, Cambridge, MA.
17. Kaplan, D. (2007). *Structural Equation Modeling*. Sage. pp. 1089–1093.
18. Kline, R. (2011). *Principles and Practice of Structural Equation Modeling* (3rd edn). Guilford, New York.
19. Koch, M.J. and McGrath, R.G. (1996). Improving labour productivity; human resource management policies do matter. *Strategic Management Journal*, 17 (5), 335-354.
20. Liu, J., Love, P.E., Sing, M.C., Carey, B., and Matthews, J. (2014). Modeling Australia's construction workforce demand: empirical study with a global economic perspective. *Journal of Construction Engineering and Management*, 141 (4). http://dx.doi.org/10.1061/(ASCE)CO.1943-7862.0000953
21. Mining Industry Human Resource Council. (2010). Canadian Mining Industry Employment, hiring requirement and available talent 10–year outlook. Kanata, ON.
22. Momin, W., Yancey, M., and Kushendra, M.(2015).HR analytics as a strategic workforce planning. *International Journal of Advanced Research,* 1 (4), 258-260.
23. Ogunade, A.O. (2011). Human capital investment in the developing world: an analysis of praxis. *Seminar Research Paper Series,* Paper 38.University of Rhode Island. http://digitalcommons.uri.edu/lrc_paper_series/38
24. Rasmussen, T. and O'Keefe, E. (2014).The extractive industry as a development industry, only through mineral skills development. *Mineral Economy*, 27, 153 – 156.
25. Rumelt R.P. (1974).*Strategy, Structure, and Economic Performance.* Harvard University Press, Cambridge, MA.
26. Salaman, G., Storey, J., and Bilsberry, J. (2005). Strategic human resource management: defining the field. *Strategic Human Resource Management: Theory and Practice*. Salaman, G., Storey, J., and Billsberry, J. (eds). Sage, London.
27. Schwen, T.M., Kalman, H.K., Hara, N., and Kisling, E.L. (1998). Potential knowledge management contribution to human performance technology research and practice. *Educational Technology Research and Development*, 46 (4), 73-89.
28. Spender, J.C. (1996). Making knowledge the basis of a dynamic theory of the firm. *Strategic Management Journal*, 17(Winter Special Issue), 45 –62.
29. Singh, A. and Sharma, J. (2015). Strategies for talent management: a study of select organizations in the UAE. *International Journal of Organizational Analysis*, 23 (3), 337-347.
30. Wendelboe, H.M., Buur, L., Therkildsen, O., and Kjaer, M. (2014). The political economy of local content in African extractives: lessons from three African countries. http://hdl.handle.net/10398/9014

© 2019 Global Journals