Volume 18 Issue 47
Originally issued as C8



Global Journal of Management and Business Research: C Finance
Volume 18 Issue 8 Version 1.0 Year 2018
Type: Double Blind Peer Reviewed International Research Journal
Publisher: Global Journals
Online ISSN: 2249-4588 & Print ISSN: 0975-5853

Cultural Dimensions Origins: Measures for Power Distance and Uncertainty Avoidance

By Rabeb Riahi & Foued Hamouda
Gabes University

Abstract- This study seeks to develop a measure method of national culture based on cultural origins. Two cultural dimensions are studied; power distance (POWD) and uncertainty avoidance (UAV). Methodology used is SEM method under LISREL approach. Findings show that environmental factors are able to determine cultural dimensions studied in our sample countries. Nevertheless, we found that cultural dimensions indicators' have evolved and are no longer the same identified in prior researches suggesting that environment evolution' sleeds to the creation of new subsistence means and new cultural needs.

Keywords: *power distance, uncertainty avoidance, MES method, environmental factors.*

GJMBR-C Classification: *JEL Code: Z10*



Strictly as per the compliance and regulations of:



© 2018. Rabeb Riahi & Foued Hamouda. This is a research/review paper, distributed under the terms of the Creative Commons Attribution-Noncommercial 3.0 Unported License http://creativecommons.org/licenses/by-nc/3.0/), permitting all non-commercial use, distribution, and reproduction in any medium, provided the original work is properly cited.

Cultural Dimensions Origins: Measures for Power Distance and Uncertainty Avoidance

Rabeb Riahi [α] & Foued Hamouda[σ]

Abstract- This study seeks to develop a measure method of national culture based on cultural origins. Two cultural dimensions are studied; power distance (*POWD)* and uncertainty avoidance (*UAV*). Methodology used is *SEM* method under *LISREL* approach. Findings show that environmental factors are able to determine cultural dimensions studied in our sample countries. Nevertheless, we found that cultural dimensions indicators' have evolved and are no longer the same identified in prior researches suggesting that environment evolution' sleeds to the creation of new subsistence means and new cultural needs.

Keywords: power distance, uncertainty avoidance, MES method, environmental factors.

I. Introduction

Culture is widely perceived as the set of values and beliefs shared with in a same community. Existing literature distinguishes several levels of culture ; national culture, gender culture, generation culture, organizational culture, professional culture... Our study concentrates on national culture because it is programmed in individuals' minds since their birth's day and developed through their daily life. It is there fore the deepest level of mental programming (Hofstede, 1989). Existing literature documents a variety of determinants used to operationalize national culture in order to easily relate it to different social choices aspects. This is why several researches try to develop methods measuring national culture by giving it attributes or dimensions. In fact, culture has been measured through some proxies like nationality (Daniels and Radebaugh, 2001), language (Nair and Frank, 1980; Pinker, 1995 ; Botazzi and Peri, 2003) or religion (Griffin and Pustay, 2003). Some other researchers developed indices to measure cultural dimensions (Hofstede, 1980 ; Schwartz 1994).

Although existing studies give many models to measure national culture, their contributions were limited and criticized because they do not take into account the dynamic nature of culture. National culture in our sample countries is identified by using Hofstede's (1980) cultural Model. Indeed, Sondergaard (1994) and Schwartz and Sagiv (1995) argue that criticisms of Hofstede's (1980) works represent a minority in national culture study researches. Therefore, Hofstede's cultural dimensions can serve as a guide for several studies studying culture influences (Magnini, 2009).

Author α σ: URRED-Higher Institute of Management of Gabes, Rue Jilani Habib 6000 Gabes- Tunisia Gabes University.
e-mails: rabebriahi@yahoo.fr, foued.hamouda@isg.rnu.tn

Otherwise, Hofstede (1980) considers that cultural dimensions in a given country have their origins in economic and demographic conditions. Hence, environment and society nature is a resultant of human behavior that follows a dynamic of that environment in order to achieve goals and meet specific needs (Bennet, 2005). Consequently, Steward (1955) concludes that cultural diversity is a result of "ecological" diversity, which justifies the fact that different cultures employ different technologies and subsistence practices.

The main purpose of this paper is to develop a measure to two of Hofstede cultural dimensions namely power distance (*POWD*), uncertainty avoidance (*UAV*) through ecological indicators. Cultural ecology theory initiated by Steward (1955) and developed by a number of researchers (Bennett, 2005 ; Zimmerer, 2007...) considers a dynamic relationship between individual and his environment. Then, by reference to cultural ecology theory, we measure our sample countries cultural dimensions through their economic and demographic characteristics under structural equations model (*SEM*).

Studying cultural dimensions determinants is interesting because it has been hypothesized that human behavior is widely influenced by beliefs. In fact, sociological model of human behavior (Jensen and Meckling, 1994)considers that individual's behavior and decision-making are conditioned by their values and beliefs, which are taught by cultural influences of the society in which he has evolved.

This study gives contributions to the existing literature as follows. First, it represents an extension to studies considering cultural relativism to understand human beliefs and behaviors in their contexts. Second, our study proposes a framework in order to measure national culture that can be employed in future researches studying national culture influences. Finally, the framework proposed and based on *SEM* method includes quantitative measures to cultural dimensions suggesting a more objective and actualized findings.

The remainder of the paper is structured as follows. In the next section we review relevant literature and we develop research hypotheses. In the third section, we describe research methodology and data measurement. Empirical results and their discussions are reported in section 4. The final section provides conclusion of the paper.

© 2018 Global Journals

II. Literature Review and Hypotheses Development

a) National culture origins: The cultural ecology theory

Cultural ecology theory refers to the ways in which a given society interacts with its environment. The theoretical framework of this relationship has been defended by several researchers in cultural anthropology and human geography such as Steward (1955), Lévis-Strauss (1962), Bennett (2005) and Zimmerer (2007). Thus, Two main approaches have been used to explain the relationship between society and environment; The deterministic or static view which considers society as a component shaped and driven by environmental factors (Davidson-Hunt and Berkes, 2003), and the possibilistic view that considers culture to be from the environment to cause or create a cultural style based on that environment (Bennet, 2005).

The concept of cultural ecology (Steward, 1955) means studying the ways in which culture is used by individuals to adapt to their environments (Sutton and Anderson, 2004). This discipline seeks to understand cultural responses that result from individual's adaptation to changing environmental conditions (Steward, 1955). It is therefore about comparing subsistence patterns related to environmental processes and their role in changing culture.

Steward (1955) shows a multilinear evolution which envisages the recurring regularity of forms and functions in different cultural areas but which come under comparable ecological conditions. The author suggests therefore the hypothesis of "cultural core" which is defined as the set of cultural characteristics that are able to link people more directly to their environments and which are necessary for their livelihood and their basic economic activities. These cultural characteristics include technologies and tools that are determined by environmental conditions and are developed to adapt to the ecological conditions and to exploit the surrounding environment. Steward concludes that cultural diversity is due to ecological diversity, which justifies the fact that different cultures employ different technologies and livelihood practices. He also demonstrates that societies sharing the same cultural core may be very different from each other due to the secondary cultural traits that stem from the cultural core and are caused by historical factors. The cultural ecology theory was later developed to lead to the ecological anthropology approach that places the human being as a culturally driven actor within ecosystems (Vayda and McCay, 1975, Davidson-Hunt and Berkes, 2003). This approach considers that people interact with their environment affected by rituals, social institutions, communities and economies and will affect them in return.

Later, adaptive dynamics extended the field of cultural ecology research by including system and feedback concepts (Bennet, 2005). This vision follows a microsocial perspective focused on the individual's role. It assumes that the balance is not due to the automatic and unconscious process of social or cultural processes, but rather to individuals' choices and decisions. Therefore, the nature of society and the environment is a consequence of human behavior that follows a dynamic of that environment and aims to achieve goals and meet specific needs. Based on these theoretical frameworks, we expect that:

H0: There is a significant relationship between cultural dimensions and environmental factors.

Applied to our study, the cultural ecology theory supposes to decode cultural dimensions through the environmental factors of a given country. Indeed, Hofstede (1980) considers that ecological factors are a consequence of the human nature and forces, and are at the origin of societal norms which determine the institution's structure and functions (see figure 1).

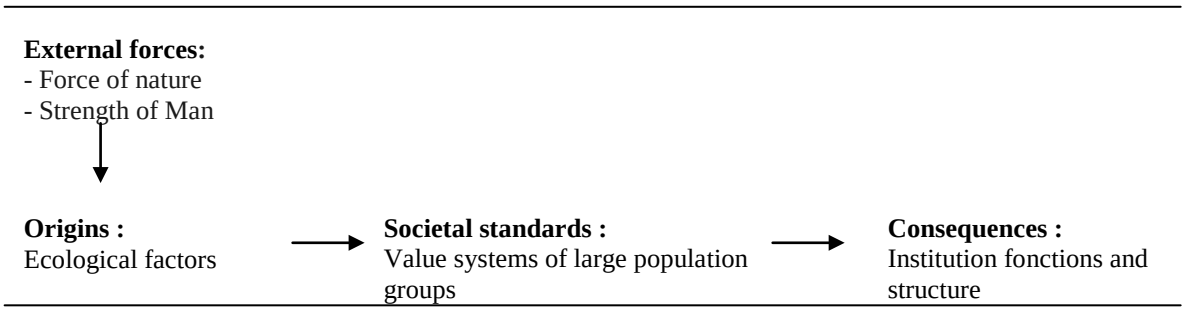

Source: Hofstede (1980, P. 27)

Figure 1: Cultural Model

© 2018 Global Journals

b) POWD determinants

POWD means the extent to which subordinates accept that power in institutions to beunequally distributed. It is measured by the subordinate's perception of the chief's power. Hofstede (1980) emphasizes the historical heritage notion of culture. He linked *POWD* to several characteristics such as the country geographical position, the population size, inequality in the sharing wealth and the weight of history. In the same way, the author establishes that the social organization is likely to guide the culture of a given country. That is why Hofstede (1980) states that *POWD* can be determined by the country's wealth. The author concludes that the wealthier the country, the lower the *POWD*. In addition, Hofstede (1980) links *POWD* degree of a given country to its population size. He argues that the larger the size of the population, the higher the degree of *POWD*. Indeed, the author argues that people in populous countries accept less accessible political power more than that in less populated countries. Hence the following hypothesis:

H1: POWD is negatively related to country wealth and positively related to population size.

c) UAV determinants

UAV means extent to which individuals feel threatened by uncertainty and unstructured situations. It deals with the way that society approach risk. *UAV* is expressed by need for formalities, predictability and security measures.Therefore, Hofstede (1980) considers three components of *UAV* degree: the need for rules, the desired stability of employment and stress in everyday life. Hofstede (1994) argues that technology, education, laws and rules help to mitigate uncertainties caused by nature. Thus, he considers that *UAV* can be identified by the extent of adoption of new technologies.Indeed, the greater the degree of *UAV*, the more the society adopts new technologies to overcome uncertainties. Hofstede (1980) also links *UAV* to attention attributed to education. He argues that the greater the degree of *UAV*, the more the society is interested to education. In addition, Noravesh and *al*. (2007) link security measures to economic stability. They argue that countries characterized by a high *UAV* do not have economic stability and do not prefer investment in financial markets. Hence the following hypothesis:

H2: UAV is positively related to new technologies adoption degree and attention given to education and, UAV is negatively related to investment in financial markets and economic stability degree.

III. Research Methodology and Data Measurement

a) Data measurement

For Hofstede (1980), the wealth of a given country can be identified through a more modern technology, a less traditional agriculture, a development of urbanism, a better education system that favors an increase of the middle class. Development in technology is linked to those of information and communication. Hence, these can reflect the extent of modernization of technology in a given country. The number of Internet users, the number of fixed broadband Internet subscriptions per 100 people and the number of mobile subscriptions per 100 people are used to measure the degree of adoption of new technologies. Moreover, Sudarwan and Fogarty (1996) argue that the transition from technology to industry was a necessity for countries seeking to gain more wealth. Hence, the contribution of the agriculture sector to the wealth of the countries in our sample is measured by the value added of the agriculture sector in relation to *GDP*. The degree of urbanization and interest attributed to education are measured respectively by the urbanization rate, the gross enrollment rate and the average duration of schooling. The population size is measured by the logarithm of the total number of inhabitants of our sample countries.

The level of economic stability can be determined through the exchange rate and *GDP* fluctuation. Noravesh and *al*. (2007) also argue that the importance of equity portfolio investment can reflect the extent of the interest allocated to investment in financial markets.

We summarize these indicators as well as the means of their measurements as following:

© 2018 Global Journals

Table 1: Cultural dimensions proxies

Proxies	Variables	Measures	Expected signs
POWD indicators			
Wealth	*AGRI*	Ratio agriculture sector to GDP	+
	URBA	Urbanization rate	-
	INTE	Internet users per 100 persons	-
	BROAD	Broadband Internet subscriptions per 100 persons	-
	GSM	GSM subscriptions per 100 persons	-
	LITER	Literacy rate	-
	SCHO	Averageyears of schooling	-
Population size	*POPU*	Naperianlogarithm of total population	+
UAV indicators			
Modern technologies	*INTE*	Internet users per 100 persons	+
	BROAD	Broadband Internet subscriptions per 100 persons	+
	GSM	GSM subscriptions per 100 persons	+
Educational system	*LITER*	Literacy rate	+
	SCHO	Averageyears of schooling	+
Economic stability	*CURR*	Fluctuations of foreigncurrency rate	+
	FGDP	Fluctuation in GDP	+
	SAVING	Gross DomesticSaving	+
Investment in financial markets	*INVEST*	Volume of investment in stock market	-

The study measurment model is the following :

$$Vi = \lambda i * Fa + \varepsilon i$$

Where; Vi= obvious variables i whichare ecological determinants; *Fa*= latent variables a which are cutural dimensions; λ_i= factor contributions of manifestvariables in the determination of latent variablesand ε_i = Measurement error of *i*.

Conceptual framework is represented as following:

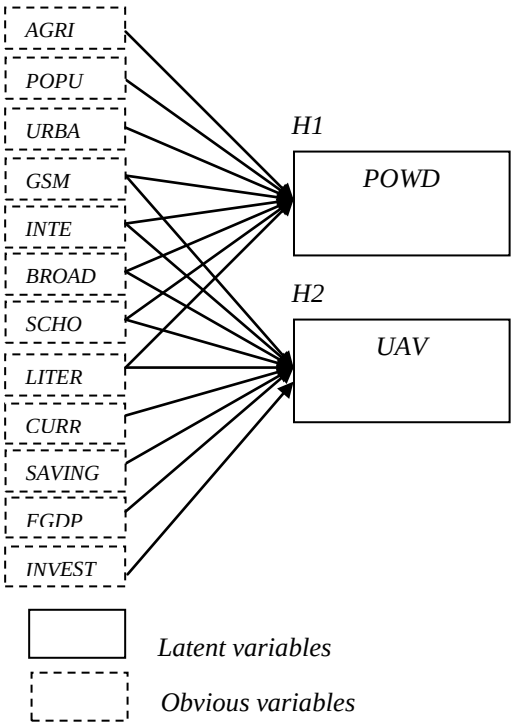

Figure 2: Conceptual framework

© 2018 Global Journals

b) Reserch methodology

The study aims to construct a conceptual model for identifying cultural dimensions based on cultural ecology theory. This objective has been achieved by using *SEM* method under *LISREL* (Linear Structural Relationship) approach. This methodology was preferred to others because in the first hand, cultural dimensions have an unobservable character. In the second hand, these dimensions have been measured approximately by observable variables. Obviously, these constructs measure may contain measurement errors. That is why, it is more appropriate to use a method taking these measurement errors into account. Finally *LISREL* approach is chosen because it reduces the arbitrariness of selecting items determining latent variables. Moreover, it provides confirmatory factor analysis aiming to test the theoretical constructs validity. Our study has been conducted on a sample of socioeconomically different backgrounds (France, Canada and Tunisia) over the period going from 2003 to 2009.

Using *LISREL* approach requires the reliability and the validity of the structural equations model (Churchill, 1979). These tests are conducted through principal component analysis (*PCA*) and confirmatory factor analysis (*CFA*) also called principal axis factoring. *PCA* and *CFA* methods aim to identify structure within a set of items which are difficult to interpret by finding interrelations between them in order to find a smaller number of unifying factors. *PCA* is a part of multivariate descriptive analyzes and aims to reduce information while minimizing losses. It consists of the transition from a large number to a smaller number of items measuring the same phenomenon and, consequently, to condensing the information related to a construct that these items aim to define. *CFA* supports the *PCA* in order to validate its analysis. Validity means that a given measure is able to describe studied phenomenon (Hair et *al*., 1998). *CFA* is conducted to confirm the psychometric quality of the *PCA* findings (Evrard et *al*., 2003). The confirmatory phase is therefore aiming at testing the assessments of fit of the global model and the constructs' content validity. In the confirmatory analysis, the measurement scales are known *a priori*. In addition, this analysis takes into account measurement errors. The model takes the following form: *Data = Model + measurement error*. Hence, the smaller the measurement error, the more the model adjusts to the data. The meaning of *PCA* and *CFA* analysis depends on the meeting of some requirements which we are going to examine by several tests.

IV. Results and Discussion

a) The PCA results

PCA phase consists in analyzing dimensionality, reliability and internal consistency of measuring instruments. *PCA* results for *POWD* are reported in table 2. This table shows that the data relating to the measurement of this dimension are factorizable. Indeed, as shown in table 2, most of the inter-item correlations of the dimension *POWD* are greater than 0.5. In addition, this table shows a *KMO* index of 0.590 with significant *Bartlett sphericity*. In addition, the community indices found vary from 0.602 for the *GSM* item to 0.984 for the *POPU* item. These findings show the importance of the inclusion of these variables in *POWD* dimension's determination. The *Cronbach's alpha* of *POWD* dimension is 0.819, which gives information on the internal consistency of measurement scale and proves that the data retained reflect the studied phenomenon.

Table 2: PCA for *POWD*scale

	AGRI	***HABI***	***URBA***	***GSM***	***INTE***	***BROAD***	***SCHO***	***LITER***
AGRI	1,000							
HABI	0,068	1,000						
URBA	-0,092	0,976	1,000					
GSM	0,075	0,701	0,614	1,000				
INTE	-0,669	0,523	0,676	0,305	1,000			
BROAD	-0,692	0,412	0,550	0,319	0,936	1,000		
SCHO	-0,534	0,765	0,878	0,394	0,913	0,814	1,000	
LITER	*-0,191*	*0,950*	*0,993*	*0,571*	*0,740*	*0,625*	*0,923*	*1,000*
community	*0,885*	*0,984*	*0,971*	*0,602*	*0,953*	*0,889*	*0,967*	*0,967*
								Bartlett sphericity = 402,317 sign. 0,000
KMO = 0,590								
Cronbach's alpha = 0,819								

© 2018 Global Journals

Table 3 provides correlations between items determining *UAV* dimension. These correlation coefficients vary between 0.007 and 0.935. This table also shows *KMO* indices of 0.511 and a significant *Bartlett sphericity*, which shows that the data relating to the determination of *UAV* dimension are factorizable. The table also shows the community indices relating to the determination of *UAV* dimension. These indices provide information on the representation quality of the items. Indeed, these are all greater than 0.7 exception for *GSM* item. However, we decide to retain this indicator given the importance of its inclusion in our study. This will be taken into account when interpreting results. *UAV* dimension shows a *Cronbach's alpha* of 0.751, which gives information on the internal consistency of the items determining UAV dimension and proves that the data retained reflect the studied phenomenon.

Table 3: *PCA* for *UAV* scale

	GSM	***INTE***	***BROAD***	***SCHO***	***LITER***	***INVEST***	***CURR***	***FGDP***	***SAVING***
GSM	1,000								
INTE	0,305	1,000							
BROAD	0,319	0,936	1,000						
SCHO	0,394	0,913	0,814	1,000					
LITER	0,571	0,740	0,625	0,923	1,000				
INVEST	0,124	0,092	0,104	0,231	0,209	1,000			
CURR	-0,080	-0,049	-0,264	0,112	0,168	-0,007	1,000		
FGDP	0,212	0,216	0,022	0,361	0,415	0,155	0,690	1,000	
SAVING	0,399	0,453	0,249	0,647	0,824	-0,075	0,245	0,341	1,000
community	0,309	0,862	0,868	0,951	0,932	0,931	0,828	0,802	0,740
Bartlett sphericity = 194,381 sign. 0,000									
KMO = 0,511									
Cronbach's alpha = 0,751									

b) Confirmatory factor analysis (CFA)

CFA is conducted to confirm the psychometric quality of *PCA* results. Our confirmatory phase is there fore aimed at testing the Goodness of fit of the global model and the validity of the constructs content. Validity means that a given measure is able to describe the studied phenomenon. *CFA* takes into account measurement errors.

i. *Goodness of fit results*

The model degree of fit s verified through absolute fit indexes, incremental fit indexes and parsimony fit indexes. Goodness of indexes of cultural model are summarized in Table 4. *CFA* results are adequate: *Chi-square/degree of freedom*=2.49, *GFI*=0.99, *RMSEA*=0.05 and *CFI*=0.98. This means that unobservable variables are adequate to the theoretical model and assumes that *POWD* and *UAV* in the sample study can be measured through economic and demographic indicators. Hence, our *H0* is confirmed.

Table 4: Goodness of fit

Goodness of fit indexes	***Value***
absolute fit indexes	
Chi-square/degree of freedom	2,49
GFI	0,99
AGFI	0,98
RMSEA	0,05
incremental fit indexes	
NFI	0,98
CFI	0,98
parsimony fit indexes	
AIC	32,49
CAIC (saturated model)	87,32 (112,25)

© 2018 Global Journals

ii. *Testing validity results*

The validity of constructs means the degree of fit between what the data measures and what they are meant to measure. Validity is measured by the *Rhô of convergent validity*. Testing validity results are reported in table 5.

Table 5: Constructs validity

	POWD	***UAV***
Rhô of convergent validity	*0,98*	*0,82*

c) *Hypothesis Tests*

Table 6 shows that all unobservable variables significantly contribute to the determination of *POWD* dimension. The absolute values of these factor contributions vary between 0.0446 and 1.703 with significant absolute values of t Student's and measurement errors close to 0.

Findings show that country wealth positively influences the *POWD* degree. In fact, *POWD* is negatively related to *AGRI* (λ = -0.0664, T = -51.962, ε = 0.00128) and positively related to *URBA* (λ = 0.0498; = 48.215, ε = 0.00103), *GSM* (λ = 0.0446, T = 12.180, ε = 0.00366), *INTE* (λ = 0.181, T = 38.817, ε = 0.00468), *BROAD* (λ = 0.145, T = 41.613, ε = 0.00349), *SCHO* (λ = 1.703, T = 48.382, ε = 0.0352) and *LITER* (λ = 0.127, T = 41.373, ε = 0.00306). This means that the wealthier the country, the greater the *POWD*. This canbe explained by the fact that wealth favors superiority behavior and thus, promotes power distance. Moreover, results show that *POPU* positively influences *POWD* degree (λ = 0.224, T = 55.326, ε = 0.00405), which implies that the more the country is populated, the fewer individuals achieve power.

In addition, we found that the most influential factor in determining the *POWD* extent is the degree of attention attributed to education followed by the population size and the degree of technological development. Never the less, findings show a negligible effect of urbanization rate and the agriculture contribution to the wealth of the sample countries. This maybe explained by the fact that these two indicators showed weak correlations with some items at the level of *PCA*.

Table 6: *POWD* indicators

Indicators	*Items*	*Expected signs*	*t-Test*	*Factor contributions*	*Error*
Country wealth	*AGRI*	+	-51,962	-0,0664	0,00128
	URBA	-	48,215	0,0498	0,00103
	GSM	-	12,180	0,0446	0,00366
	INTE	-	38,817	0,181	0,00468
	BROAD	-	41,613	0,145	0,00349
	SCHO	-	48,382	1,703	0,0352
	LITER	-	41,373	0,127	0,00306
Population size	*POPU*	+	55,326	0,224	0,00405

Findings reveal significant factor contributions for all indicators of the *UAV* degree (contributions whose absolute values vary between 0.00519 and 0.420) with measurement errors significantly close to zero.

Obviously, we found that *UAV* is negatively related to the *GSM* (λ = -0,113, T = -34,600, ε = 0,00434), *BROAD* (λ = -0,0927, T = -52.969, ε = 0.00175) and *INTE* (λ= -0.0936, T=-40.231, ε= 0.00233). This canbe explained by the fact that new technologies help to overcome uncertainty. In addition, results show that this cultural dimension is negatively related to *LITER* (λ = -0.0166, T = -23.052, ε = 0.00072) and *SCHO* (λ = 0.170, T = 34.621, ε = 0.00490). This result reveals that a good education system contributes to reducing the ambiguity and leads to *UAV* moderation in our sample countries.

These last two results canbe explained by the cultural ecology theory under its adaptive dynamic perspective. Indeed, this theory indicates, on the one hand, that technologies and strategic actions are voluntarily implemented by individuals following the identification of their cultural needs. On the other hand, the cultural ecology theory suggests that, following the creation of the means necessary for subsistence, new

© 2018 Global Journals

cultural needs arise according to the new environment . We also found that *UAV* is positively related to *CURR* (λ = 0.0425, T = 34.559, ε = 0.00123), *FGDP*(λ = 0.0459, T = 21.214, ε = 0.00216) and *SAVING* (λ = 0.420, T = 14.175, ε = 0.0296). This means that countries that do not have economicst ability are more vulner able to uncertainty.

Finally, findings show that *INVEST* is positively related to the *UAV* degree of (λ = 0.00519, T = 16.079, ε = 0.000323), however, this effect remains very weak. This implies that attention given to investing in financial markets is no longer just culture-related. Indeed, with financial markets, companies became increasingly interested in it. This is due to the increasing flexibility of the rules governing access to foreign markets and the reduction of barriers to trade in financial services.

Results show that the most important determinants of the *UAV* degree are the degree of attention attributed to education and the level of economic stability. They also reveal that new technologies adoption has a weaker role in determining this cultural dimension. Although the holding rate of *GSM* shows a greater correlation, this indicator is not taken into account because of its low community index at the level of *PCA*.

Table 7: *UAV* indicators

Indicators	*Items*	*Expected signs*	*t-Test*	*Factor contributions*	*Error*
New technologies adoption	*GSM*	+	-34,600	- 0,113	0,00434
	BROAD	+	-52,969	- 0,0927	0,00175
	INTE	+	-40,231	- 0,0936	0,00233
Attention given to education	*SCHO*	+	-34,621	- 0,170	0,00490
	LITER	+	-23,052	- 0,0166	0,00072
Economic stability	*CURR*	+	34,559	0,0425	0,00123
	FGDP	+	21,214	0,0459	0,00216
	SAVING	+	14,175	0,420	0,0296
Investment in financial markets	*INVEST*	-	16,079	0,00519	0,000323

V. Conclusion

The study proposes a conceptual framework measuring cultural dimensions through ecological indicators and informes about items that are able to determine these dimensions.

Cultural dimensions considered in our study are power distance and uncertainty avoidance. Findings show that cultural dimensions indicators' have evolved and are no longer the same identified by Hofstede (1980). This change in culture origins is justified by environment evolution's. Indeed, referring to the cultural ecology theory under its adaptive dynamics, technologies and strategic actions are voluntarily implemented by individuals following the identification of their cultural needs. However, after the creation of the means necessary for subsistence, new cultural needs arise according to the new environment. Some indicators impact is no longer the same as identified in Hofstede studies'. For example, new technologies development and adoption, and education systems development may reduce perplexity. This study was limited in development indicators identifiyed in prior researches. Regarding future research, the impact of other development indicators canbe studied in order to enrich the conceptual framework developed by our research. Indeed, due to the unobservable character of cultural dimension, we assume that *SEM* is a relevant method in determining items related to these dimensions.

References Références Referencias

1. Bennett J-W., 2005, "*The Ecological Transition: Cultural Anthropology and Human Adaptation*", New Brunswick (New Jersey): Transaction Publishers.
2. Bottazzi L. and G. Peri, 2003, "Innovation and spillovers in regions: Evidence from European patent data", *European Economic Review*, Vol. 47(4), p. 687-710.
3. Churchill G-A., 1979, "A paradigm for developing better measures of marketing constructs", *Journal of Marketing Research*, Vol. 16(1), p. 64-73.
4. Daniels J-D. and L-H. Radebaugh, 2001, "*International Business: Environments and Operations*", Reading, Mass: Addison-Wesley.
5. Davidson-Hunt I-J. and F. Berkes, 2003, "Nature and society through the lens or resilience: towards a human-in-ecosystem perspective", p. 53-82, in F. Berkes, J. Colding, and C. Folke, editors, "*Navigating Social-Ecological Systems: Building Resilience for Complexity and Change*", Cambridge University Press, Cambridge, U.K.

© 2018 Global Journals

6. Evrard Y., B. Pras and E. Roux, 1993, "*Market, études et recherches en marketing*", Nathan.
7. Griffin R. and M. Pustay, 2003, "*International Business*", 3rd edn. Prentice-Hall: Upper Saddle River, NJ.
8. Hair J-F., R-E. Anderson, R-L. Tatham and W-C. Black, 1998, "*Multivariate data analysis with readings*", 5th edition, Upper Saddle River, NJ: Prentice-Hall.
9. Hofstede G., 1994, "The business of international business is culture", *International Business Review*, Vol. 3(1), p. 1-14.
10. Hofstede, G. (1980). *Culture's Consequences: International Differences in Work Related Value*, Beverly Hills, Sage Publications.
11.))))))))))))Jensen M-C. and W-H. Meckling, 1994, "The Nature of Man", *Journal of Applied Corporate Finance*, Vol 7(2), p. 40-45.
12. Magnini V-P., 2009, "The influence of national culture on the strategic use of salesperson pricing authority: A cross-country study within the hotel industry", *International Journal of Hospitality Management*, Vol. 28(1), p. 173-176.
13. Nair R-D. and W-G. Frank, 1980, "The impact of disclosure and measurement practices on international accounting classification", *The Accounting Review*, Vol. 55(3), p.426-450.
14. Noravesh I., Z-D. Dilamiand M-S. Bazaz, 2007, "The impact of culture on accounting: Does Gray's model apply to Iran?",*Review of Accounting and Finance*, Vol. 6(3), p. 254-272.
15. Pinker S., 1995, "*The language instinct*", Allen Lane, The Pinguoin Press, UK.
16. Schwartz S-H. and L. Sagiv, 1995, "Identifying culture-specificities in the cintent and structure of values", *Journal of cross-cultural psychology*, Vol. 26(1), p. 92-116.
17. Schwartz S-H., 1994, "Beyond individualism/collectivism: New cultural dimensions of values", in U. Kim, H-C. Triandis, C. Kagitcibasi, S-C. Choi, and G. Yoon (Eds.), "*Individualism and collectivism: Theory, method and applications*", Sage Publications, Thousand Oaks, CA, p. 85-119.
18. Sondergaard M., 1994, "Research note: Hofstede's consequences: A study of reviews, citations and replications", *Organizational Studies*, Vol. 15(3), p. 447-456.
19. Steward J-H., 1955, "*Theory of Culture Change: the Methodology of Multilinear Evolution*", University of Illinois Press, Urbana.
20. Sudarwan M. and T-J. Fogarty, 1996, "Culture and accounting in Indonesia: an empirical examination", *The International Journal of Accounting*, Vol. 31(4), p. 463-481.
21. Sutton M-Q. and E-N. Anderson, 2004, "*Introduction to Cultural Ecology*",Oxford-New York: AltaMira Press.
22. Vayda A-P. and B-J. McCay, 1975, "New directions in ecology and ecological anthropology", T*Annual Review of Anthropology*, Vol. 4(1), p. 293-306.
23. Zimmerer K-S., 2007, "Cultural ecology (and political ecology) in the 'environmental borderlands': exploring the expanded connectivities within geography",*Progress in Human Geography,* Vol. 31(2), p. 227-244.

© 2018 Global Journals