Volume 18 Issue 48
Originally issued as B7



Global Journal of Management and Business Research: B
Economics and Commerce
Volume 18 Issue 7 Version 1.0 Year 2018
Type: Double Blind Peer Reviewed International Research Journal
Publisher: Global Journals
Online ISSN: 2249-4588 & Print ISSN: 0975-5853

Financial Slack and Firm Performance in Africa: The Mediating Effects of the Banking Sector and the Stock Market Development

By Demis Hailegebreal Hailu, Man Wang, Misraku Molla Ayalew & Yidersal Dagnew Dinberu

Dongbei University of Finance and Economics

Abstract- Organizational theory claimed favorable effect of slack on performance and the agency theory; supported an adverse influence of slack on performance. This study explored the association between the financial slack and the financial performance of firms in Africa. This study further rexamined the mediating effect of the banking sector and the stock market development on the slack-performance nexus. While the firm performance is measured as the return on assets (ROA), and return on sales (ROS), the slack components are categorized as available, potential and recoverable slacks. We used firm-level data from 457 firms in 13 African countries from 2006 to 2015. The finding of this study supported the organizational theory that favors a positive effect of slack on performance. The result of mediation analysis shows that both the banking sector and the stock market development have no strong mediating effect on the slack-performance relationship of firms in Africa. This study finally offers micro and macro level policy implications.

Keywords: Africa, Banking sector development, Stock market development, Financial slack, Firm performance, Structural Equation Modelling.

GJMBR-B Classification: JEL Code: M20



Strictly as per the compliance and regulations of:



© 2018. Demis Hailegebreal Hailu, Man Wang, Misraku Molla Ayalew & Yidersal Dagnew Dinberu. This is a research/review paper, distributed under the terms of the Creative Commons Attribution-Noncommercial 3.0 Unported License http://creativecommons.org/licenses/by-nc/3.0/), permitting all non-commercial use, distribution, and reproduction in any medium, provided the original work is properly cited.

Financial Slack and Firm Performance in Africa: The Mediating Effects of the Banking Sector and the Stock Market Development

Demis Hailegebreal Hailu [α], Man Wang [σ], Misraku Molla Ayalew [ρ] & Yidersal Dagnew Dinberu [ω]

Abstract- Organizational theory claimed favorable effect of slack on performance and the agency theory; supported an adverse influence of slack on performance. This study explored the association between the financial slack and the financial performance of firms in Africa. This study further rexamined the mediating effect of the banking sector and the stock market development on the slack-performance nexus. While the firm performance is measured as the return on assets (ROA), and return on sales (ROS), the slack components are categorized as available, potential and recoverable slacks. We used firm-level data from 457 firms in 13 African countries from 2006 to 2015. The finding of this study supported the organizational theory that favors a positive effect of slack on performance. The result of mediation analysis shows that both the banking sector and the stock market development have no strong mediating effect on the slack-performance relationship of firms in Africa. This study finally offers micro and macro level policy implications.

Keywords: Africa, Banking sector development, Stock market development, Financial slack, Firm performance, Structural Equation Modelling.

I. Introduction

Organizational resources and firm performance are the most significant focuses in the strategic management literature. While the firm soundness is the leading issue investigated, the slack resources has received important consideration in the field (Daniel et al., 2004, Alessandri et al., 2014, Mousa et al., 2013). The resource-based theory (Penrose, 2009) suggested that organizational slack is considered a benefit as it can safeguard organizations at the times of environmental turmoil, declines the conflict among employees and promote innovation. Moreover previous empirical studies widely investigated the impact of financial slack on firms' performance, supported the resource-based and behavioral theories which found the positive influence of financial slack on firms' financial performance (Shahzad et al., 2016, Bradley et al., 2011, Daniel et al., 2004, Chen and Miller, 2007, Wan and Yiu, 2009, Peng et al., 2010, Liu et al., 2014, Tan and Peng, 2003, Bourgeois, 1981, Nohria and Gulati, 1997).However, the agency theory (Jensen and Meckling, 1976) argued that organizational slack is inefficient and accrues because of poor management which is supported by several empirical studies. Consistent with the agency and pecking order theories, studies investigated the relationship between the financial slack and firm performance documented an inverse relationship between these variables (Voss et al., 2008, Latham and Braun, 2009, Altaf and Shah, 2017). Furthermore, other studies documented that there exists a curvilinear relationship between slack and firm performance, having an inverse U-shape suggesting too little or/ and too much slack being awkward, firms need to uphold the optimal level of slack resources (Tan and Peng, 2003, George, 2005, Wiersma, 2017b).

Though previous studies extensively examined the relationship between slack and firm performance in developed nations (Daniel et al., 2004, Bradley et al., 2011, Argilés-Bosch et al., 2016, Wiersma, 2017b, Stan et al., 2014)and in emerging nations such as China (Liu et al., 2014, Yang and Chen, 2017, Chen and Miller, 2007, Peng et al., 2010)and India(Altaf and Shah, 2017), this has not been extensively investigated in Africa. These studies documented the direct association of financial slack and firm performance. Also, researchers seldom explored the association of the banking sector and the stock market development and firm performance (Fafchamps and Schündeln, 2013, Pera, 2014, Masoud and Hardaker, 2014) and the link between financial slack and the banking and the stock market development (Agarwal and Mohtadi, 2004)(Etudaiye-Muhtar and Ahmad, 2014). Despite, the mediating effects of the banking sector and the stock market development on slack-performance linkage were ignored.

The current study, therefore, contributes to the corporate finance literature in the following ways. (1) It explored the direct slack-performance relationship of firms operating in heterogeneous business environments. (2) It investigated the mediating effects of the banking sector and the stock market development on the slack-performance relationship of firms in Africa

Author α ρ ω: Accounting school, Dongbei University of Finance and Economics, Dalian city, P.O.B 116025, P.R. China.
e-mails: dhgebreal@gmail.com, missmolla@yahoo.com, tennadag@gmail.com
Author σ: Accounting School, Dongbei University of Finance and Economics, Internal Control Research Centre in China, Dalian city, P.O.B 116025, P.R. China. e-mail: manwang@dufe.edu.cn

© 2018 Global Journals

using Structural Equation Modeling believing that mediation analysis facilitates a better understanding of the relationship between the financial slack and firm performance through banking sector and stock market development.

II. The Banking and Stock Market Development in Africa

Generally, in Africa, the banking sector and the stock markets development has been remained low compared to developed and emerging continents. However, there still exists relative differences in these institutional developments in African countries that influence on the slack-performance nexus. For instance, Pera (2014) reviewed the banking sectors in Sub-Saharan Africa and reported that, as the banking sector continues in a higher growth cycle, the need for formal financial services usually increases leading to an increase in bank assets to GDP. Likewise, Ngare et al. (2014)explored the association between the stock market development and economic growth, and found a positive influence of the stock market development on investment. This result revealed that the stock market is decisive in providing external finance for investment so that firms can accumulate more slack. We computed the average banking and stock market development using bank deposit to GDP% and stock market capitalization to GDP% of Asia, Europe, and Africa from 2006 to 2014 to compare African banking sector and stock market development with the stated continents (see figure 1). We also used the world average bank deposit to GDP% and Stock market capitalization to GDP% as a baseline for comparison between the stated continents. Accordingly, the average banking sector development is found to be the highest in Europe, which is 72.228 followed by Asia, which is 56.096 and the world average is 41.931 in the last nine years. The average banking development of Africa is found to be the lowest (30.825), indicating that the banking sector development in Africa is in its infant stage. On average, Asian stock market is found to be relatively better with an average of 59.567 followed by the European stock market with an average of 55.558. Africa is still behind in stock market development compared with Asia and Europe. However, African stock market development, compared with the world's average is found to be better with the average stock market development of 47.392, indicating the stock market development in Africa is in its initial stage, but it is considered to be promising in the future.

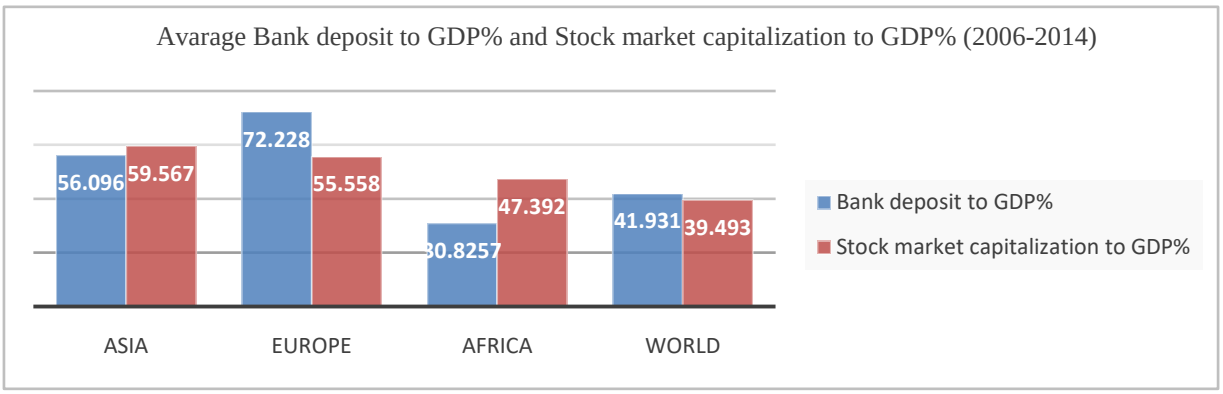

Figure 1: Average Bank deposit to GDP% and Stock market Capitalization to GDP% (2006-2014)

III. Literature Review and Hypothesis

Though Barnard (1968)stated the role of slack in his work on *the Functions of the Executive*, the specific label of slack was not conceived until March and Simon (1958)issued their influential book of *'organization '*in 1958. Resources-based (Penrose, 2009) and organizational theorists (Cyert and March, 1963, Pfeffer and Salancik, 1978, Thompson, 1967)considered the firm as a unit to an organism that needs survival as the ultimate goal. The slack is defined as a cushion of actual or potential resources that enable a firm to adjust effectively to internal pressures for alteration or to external burdens for change in policy, and to pledge changes in strategy related to the external environment(Bourgeois, 1981, Nohria and Gulati, 1997). According to Cyert and March (1963),Dimick and Murray (1978), and Geiger and Cashen, 2002), slack is defined as the resource available to the organization, which is beyond the minimum requirement to operate a required level of production. The slack resources comprise human, technological and financial slacks. However, our study considered the financial slack resources. Prior literature suggested that there are multiple components of slack (Bourgeois, 1981, Singh, 1986, Geiger and Cashen, 2002). These components are classified as available, recoverable and potential slacks(Bourgeois, 1981, Bromiley, 1991, Daniel et al., 2004, Bradley et al., 2011, Marlin and Geiger, 2015), absorbed and unabsorbed slack (Tan, 2003, Lin et al., 2009, Huang and Li, 2012, Argilés-Bosch et al., 2016), and high-discretion and low discretion slack George (2005).These

© 2018 Global Journals

approaches used to categorize slack are similar in that slack resources are either available and unabsorbed or already absorbed and recoverable, are considered internal slack, when slacks are not currently in the organization are taken as external, potential, and unabsorbed(Bourgeois, 1981, Bromiley, 1991, Daniel et al., 2004, Bradley et al., 2011, Marlin and Geiger, 2015). Based on these similarities we used available, recoverable, and potential slacks, consistent with studies of (Bourgeois, 1981, Bromiley, 1991, Daniel et al., 2004, Bradley et al., 2011, Marlin and Geiger, 2015). While available slacks clarify the types of slack that are unused, but readily available (Bourgeois, 1981, Bromiley, 1991, Daniel et al., 2004, Bradley et al., 2011, Marlin and Geiger, 2015), potential slacks present the current potential to the firms to obtain resources through debt financing (Marlin and Geiger, 2015) and recoverable slacks capture the extent to which organizations have embedded resources in the form of excess costs that the firm can recover it during the financially hardship times(Bourgeois, 1981, Bromiley, 1991, Daniel et al., 2004, Bradley et al., 2011, Marlin and Geiger, 2015).

Regarding its relationship with performance different components of the slack has been treated (Nohria and Gulati, 1997) though, different views exist about the paybacks of slack (Geoffrey Love and Nohria, 2005). For instance, some empirical studies documented the positive relationship between slack and performance (Vanacker et al., 2013, Cyert and March, 1963, Bradley et al., 2011, Marlin and Geiger, 2015) while others predicted negative nexus(Jensen, 1986, Picolo et al., 2017, Shahzad et al., 2016, Argilés-Bosch et al., 2016) and curve-linear (George, 2005, Tan, 2003, Tan and Peng, 2003, Kim et al., 2008, Wiersma, 2017b, Wiersma, 2017a, Danneels, 2008). Resources-based theorists argue that slack resources can help the organization in the externalization of opportunities (Penrose, 2009), safeguard the firms from the environmental crisis (Thompson, 1967) and upsurge a firm's strategic decisions (Ma et al., 2012). Especially during the turmoil, slack allows the organization to hang in there (Sharfman et al., 1988). According to organizational theory, the slack has been used to perform four functions. First, slack acts as an incentive, which indicates payment to members of the alliance more than what is required to maintain the firm (Cyert and March, 1963). Second, slack can become a resource for conflict resolution assuming that, with adequate slack, there can be a solution to every problem. Third, slack is buffer, which insulates the technique core of the firm from environmental turmoil. Fourth, slack can facilitate the strategic behavior, which enables the organization to test novel strategies like familiarizing new products and inflowing new markets (Thompson and Levine, 1997). Therefore, slack is necessary to help ensure the long-run survival of the organization. Especially during the turmoil, slack allows the organization to hang in there (Sharfman et al., 1988).

Despite, organizational theorists confess that 'slack resources are extra costs to the firm' and that too much slack is incapable (Galbraith, 2007). However, they generally believed that, given the complex trade-offs, the benefits of slack offset its costs, and that a zero-slack organization is not realistic. Hence, organizational theorists suggest that, before reaching an excessive level, the slack resources have a favorable impact on the firm's performance, which is supported by the result of several prior empirical studies(Bradley et al., 2011, Vanacker et al., 2013, Marlin and Geiger, 2015, Argilés-Bosch et al., 2016, Picolo et al., 2017). Thus, given the arguments of organizational theory and the results of prior empirical studies, the following hypothesis is offered:

Hypothesis 1: Financial slacks have a positive association with the firm's performance.

By painting a different picture of the benefit of slack, agency theory turns the organizational theory viewpoint 'upside down' (Davis and Stout, 1992). Agency theory cast-offs the viewpoint of organizational theory that the organization is an organism with human-like properties such as interest in survival. Contrarily, the firm is not an individual but it is a legal entity that serves as a focus for multiple procedures which carried out the conflicting objectives of individuals into steadiness within a framework of contractual relations (Jensen and Meckling, 1976).This viewpoint concerns the firm as a nexus of contracts among principals and agents (Fama, 1980). Agency theorists argued that maintaining slack can be good for the firm; rather, it will only be good for executives acting as agents (Jensen and Meckling, 1976). Since executives integrally have a set of goals such as the chase of power, respect, money, and job securities, that are unaligned with the interests of principals, executives may use slack to involve in excessive diversification, empire-building, and on the job shirking. Thus, slack may become a source of agency problems, that breed inefficiency also called x-inefficiency which means 'the variation between the efficient behavior of business assumed by economic theory and their real behavior due to uncompetitive pressure' (Leibenstein, 1969).The view of agency theory is empirically supported by prior studies(Tan and Peng, 2003, Shahzad et al., 2016, Lee and Wu, 2016). Based the arguments of agency theory and the results of prior empirical studies, we proposed the following hypothesis:

Hypothesis 2: Financial slacks have a negative association with the firm's performance.

The causal relationship between financial slack and firm performance deserves more attention than

© 2018 Global Journals

recently. Some prior studies evidenced positive (Bradley et al., 2011, Vanacker et al., 2013, Marlin and Geiger, 2015, Argilés-Bosch et al., 2016, Picolo et al., 2017)and others documented negative(Tan and Peng, 2003, Shahzad et al., 2016, Lee and Wu, 2016) association between financial slack and firm performance. These studies documented the direct association of slack and firm performance. Also, researchers seldom explored the association between the banking sector and the stock market development and firm performance. The banking sector development leads firm financial performance (Fafchamps and Schündeln, 2013). SimilarlyPera (2014) found that as the banking sector develops, the need for formal financial institution rapidly increases, so does the ratio of bank assets to GDP in Sub-Saharan Africa. Moreover Masoud and Hardaker (2014) concluded that both the stock market and the banking sector development enhance the firm's growth that leads to performance. The link between financial slack and banking sector and the stock market development also has been hardly explored. Etudaiye-Muhtar and Ahmad (2014), investigated the banking sector development and corporate leverage in South Africa and they found that as the banking sector develops, firms in South Africa use less debt. Likewise, Agarwal and Mohtadi (2004) documented that while the banking sector favors debt financing, equity market favors equity financing in developing countries. MoreoverDemirgüç-Kunt and Levine (1996), Demirgüç-Kunt and Maksimovic (1996a) and Demirgüç-Kunt and Maksimovic (1996b) evidenced the stock market development produces a higher debt-equity ratio for firms and help entrepreneurs diversify their portfolios. Also, Demirgüç-Kunt and Maksimovic (1996b) found that a significant positive relationship between bank development and debt-equity and a negative, but insignificant relationship between stock market development and debt-equity ratio. The results of the above studies, in general, are an indication that preference of firms to use internal or external sources of funds, for financing investment projects is dependent on the institutional development which can provide external sources of finances in the form of debt and or equity. That is, in countries where the banking sector and the stock market are well-developed, firms prefer external financing. In such countries, firms are supposed to retain more internal sources of finance in the form of slack. Contrarily, in countries where the banking sector and stock market are underdeveloped, firms rely on their interior resources support their investment projects and are supposed to have little slack resources. Therefore, we proposed the following hypotheses.

Hypothesis 3: The banking sector development has significant mediating effect on the slack-performance relationship.

Hypothesis 4: The stock market development has significant mediating effect on the slack-performance relationship.

IV. Methodology

Sample and Data Sources: We draw the study sample from 1,287 publicly listed firmsof33 African countries. We exclude financial companies considering that their operation is different from the non-financial firms that may lead to unique financial slack resources. We then included 457 firms and 13 countries over ten years (2006-2015). We obtained the firm-level data from the Osiris database and the data for bank deposit to GDP% and the stock market capitalization to GDP% from the World Bank database. We include the banking sector and stock market development with missing values because we could not find the full years' data for some countries from the stated database. The effect of including the banking sector and the stock market development with missing values is a decrease in the observation of the study (see Table 2).

Performance Measures: Consistent with prior studies, (Bradley et al., 2011, Latham and Braun, 2009, Marlin and Geiger, 2015, Picolo et al., 2017, Argilés-Bosch et al., 2016, Tan, 2003), ROA (Net income/Total assets) and ROS (Net income/Sales) were used as a measure of performance. The purpose of using ROA and ROS is to capture the firm's executive's effectiveness for the maximization of profits from investments in assets, and operational performance respectively.

Explanatory Variables: We used available, potential, and recoverable slack resources as explanatory variables. Particularly we used two available slacks components; (1) current assets/current liability (2) (current asset - current liabilities)/sales, three potential slack components; (1) debt/equity, (2) debt/sales and (3) debt/assets, and one recoverable slack component; (1) selling, general, and administrative expenses/sales.

Control Variables: We controlled the firm size since both slack and performance are dependent on firm size and firm growth (sales growth/asset growth). Also, unlike prior studies, we controlled the banking sector and stock market development using bank deposits to GDP% and stock market capitalization to GDP% respectively.

Model Specification: The following model is developed to test our hypotheses.

$$Y_{ij} = \alpha + \sum_{k=1} \beta_k \, slack_{ij} + \sum_{h=1} \beta_h \, control_{ij} + \varepsilon_i + \delta_i + \mu_j$$

Where $\boldsymbol{Y_{ijt}}$ is performance proxies(ROA, and ROS), i is firm, j is country, $\mathbf{Slack_{ij}}$ is a vector of slack components, $\mathbf{Control_{ij}}$ is a vector of control variables, $\boldsymbol{\beta_k}$ and $\boldsymbol{\beta_h}$are coefficients of explanatory and control

© 2018 Global Journals

variables respectively and $\boldsymbol{\varepsilon_i}$ is error term, $\boldsymbol{\delta_i}$ is industry effect and μ_j is country effect.

Estimation Approach: Our data set is a panel, constituting 457 firms and 13 countries over ten years. Therefore, we employed the Hausman fixed-random specification test that suggests a fixed effect model with a Chi-square of 106.21 (p-value=0.000) is appropriate for our dataset.

We developed the hypothesis used to prove the mediating effects of the banking sector development (M_1) and the stock market development (M_2) on the slack (X) and performance (Y) linkage. The empirical testing of mediation effects involves two broad categories (1) the Baron and Kenny's approach, also known as segmentation (implicit) approach and (2) the transmittal (explicit) approach. Based on segmentation approach, three hypotheses are required: H1) independent variable (X) affects the mediator (M), H2) mediator (M) affects the dependent (Y) and H3) the mediator mediates the nexus of the independent (X)and the independent (Y) variables. Contrarily, the transmittal approach, also called Sobel test (Sobel, 1982), the Distribution product Method (MacKinnon et al., 2002), Bootstrapping (Bollen and Stine, 1990), Monte Carlo Simulation (MacKinnon et al., 2004), and Bayesian Estimation (Yuan and MacKinnon, 2009), needs a solo hypothesis attesting that a mediator affects the link between X and Y. Though the Baron and Kenny method was a widely used approach, recent mediation approaches argued that Baron and Kenny's approach has numbers of limitations such as 1) lesser statistical power, 2) not testing a specific indirect effects, 3) neither measuring the extent of the mediation effect, nor accepting models with inconsistent mediation (MacKinnon et al., 2000, MacKinnon et al., 2002, Hayes, 2009, Rungtusanatham et al., 2014). Considering the curbs of Baron and Kenny method, Kenny et al. (1998) and Rungtusanatham et al. (2014)recommended the transmittal approaches of mediation. More precisely, Frazier et al. (2004), Rungtusanatham et al. (2014),Mumtaz Ali Memona and Chuahe (2018) suggested that bootstrapping is a powerful method to detect mediation by capturing complex and dynamic relationship within observed and unobserved variables via diagram and system of linked regression style. We, therefore, used Structural Equation Modeling (SEM) with bootstrap standard errors and confidence intervals to test the mediating effects of the banking sector and the stock market development on the slack-performance nexus.

The good of fit of the model: The second step of the mediation process, next to model specification (path diagram), is testing the goodness of fit of the model. There are various indices of model goodness of fit and suggested that it is not necessary or realistic to use all of them and the most commonly reported fit indices are the CFI, GFI, NFI and the NNFI (McDonald and Ho, 2002). To the contrary, reporting the various indices is necessary because different techniques reflect a different aspect of model fit (Crowley and Fan, 1997). Following this argument, Hu and Bentler (1999) suggested a two-index presentation strategy, namely Tucker-Lewis Index (TLI) & Standardized Root Mean Square Residual (SRMR), Root Mean Square Error of Approximation (RMSEA) & Standardized Root Mean Square Residual (SRMR) and Comparative Fit Index (CFI) & Standardized root mean square residual (SRMR). We, thus, used combinations of RMSEA and SRMR. We choose these indices because they are more sensitive to sample size, model misspecification and parameter estimates and the values of SRMR less than 0.08, and RMSEA less than 0.06 indicate a good fit of the model.

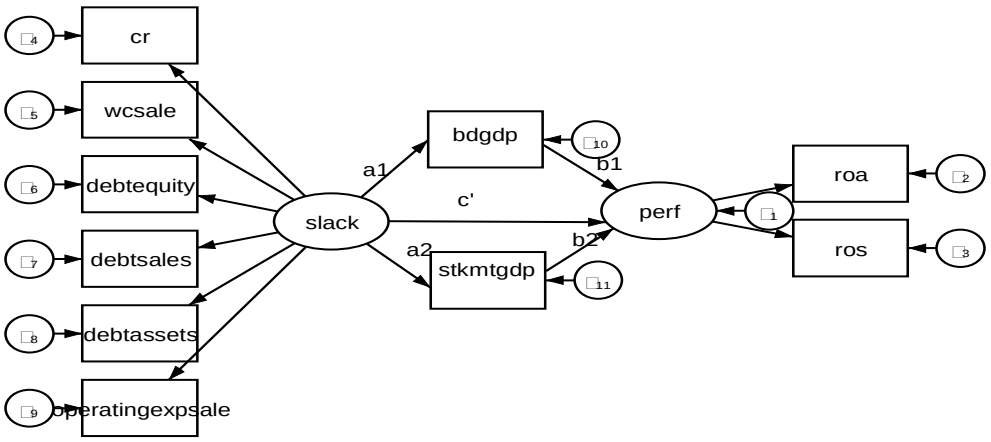

Figure 2: Path diagram of the mediation model

© 2018 Global Journals

Where cr is current ratio, wcsale is working capital to sale, debtequity is Debt to Equity, debtsales, Debt to Sales, debtassets is Debto to assets, Slack is slack variables, bdgdp is Bank deposit to GDP%, stmktgdp is Stock market capitalization to GDP%, performance is firm performance, roa is Return on assets and ros is Return on sales, path c ' is the direct effect of slack performance holding banking sector and stock market development constant, path 'a$_1$b$_1$' presents the indirect effects of financial slack on firm performance through banking sector development holding stock market development constant, path 'a$_2$b$_2$' is the indirect effect of financial slack on firm performance through stock market development holding banking sector development constant and paths c '+ a$_1$b$_1$ and c '+ a$_2$b$_2$ are the total effects of financial slack resources on financial performance taking banking sector and stock market development as mediator respectivel.

V. Descriptive Statistics and Correlation

Table 1 reports the mean value, the correlation and the Variance Inflation Factor (VIF). We found that the ROS and ROA of firms, on average, is 5.92 and 0.04 suggesting the operational performance (ROS) of firms in Africa is higher than its return on assets (ROA). Firms in Africa reported, on average, the current ratio and working capital of 4.55 and 75.41 respectively, suggesting that first reported the highest working capital ratio. The mean value of the ratio of debt- to equity, debt to sales and debt to assets are 3.76, 16.35 and 0.78 respectively, revealed that firms reported the highest debt to sales ratio. On average firms in Africa reported very low operating to sales ratio which is accounted to 0.0099. The mean value of the natural logarithm of total assets (firm size) is 5.69. Bank deposits to GDP% and stock market capitalization to GDP%, on average, are 53.56 and 85.83 respectively which shows in Africa the stock market development is better compared with the banking sector development. Table 1 also presents the correlation, Variance Inflation Factor, and the tolerance value (1/VIF). The highest correlation is found between the ratio of Debt to Sales and working capital to sale (0.7214) which even is tolerable. However, the correlation coefficients among most of the other variables are fairly small, suggesting there is no multicollinearity problem in our study. We further checked the multicollinearity problem using VIF and 1/VIF that clearly indicate whether this problem happened or not in our study. According to Leech et al. (2005), the value of VIF higher than 10 or the value of tolerance (1/VIF) lower than 0.1 is an indication of the existence of a multicollinearity problem in the model of the study. As we can see from table 2, there is no value of VIF higher than 10 and 1/VIF lower than 0.1 indicating that the problem of multicollinearity does not exist in our model and all variables can be retained in the model.

Table 1: Mean, Correlation and Variance Inflation Factor (VIF)

	Mean	CR	WC	Debt-Equity	Debt-Sales	Debt-Assets	Op.exp	size	Growth	Bank	Market	VIF	1/VIF
ROA	0.04												
ROS	5.92												
CR	4.55	1										1.00	0.998
WC	75.41	0.0235	1									2.48	0.402
Debt-Equity	3.76	0.001	-0.0004	1								1.00	0.9988
Debt-Sales	16.35	0.0171	0.7214	0.0034	1							2.84	0.352
Debt-Assets	0.78	-0.0262	-0.0024	0.013	-0.007	1						1.01	0.994
Op.exp	0.01	-0.0011	0.0016	-0.006	0.2945	0.007	1					1.25	0.802
size	5.69	-0.0075	-0.0109	-0.008	-0.0007	-0.04	0.0232	1				1.07	0.933
Growth	-6.76	0.0015	0.0078	0.0003	-0.1958	-0.003	0.0012	-0.016	1			1.12	0.895
Bank	53.56	0.0218	0.0044	0.0035	0.0134	-0.027	0.0101	-0.251	0.0007	1		1.19	0.842
Market	85.83	0.0055	0.0386	0.0285	0.0504	0.025	0.0357	-0.090	-0.02	0.32	1	1.12	0.889
Mean VIF												1.41	

Where WC is Working capital, Debt-Equity is the ratio of debt to Equity, Debt-Sales is the ratio of Debt to Sales, Debt-Asset is the ratio of Debt to total assets, Op.exp is the ratio of operating expense to sales, size is the natural logarithm of total assets, growth denotes firm growth, Bank denotes banking sector development Market is Stock market development, VIF is the Variance Inflation Factor and 1/VIF is tolerance

VI. Result and Discussion

a) Slack-performance nexus

The first purpose of this study is to examine the relationship between financial slack and firm performance of firms in Africa. We then tested our hypotheses by estimating the model using the fixed effect (within) robust estimation approach. The R-square within (0.98 when we use ROS and 0.56 when we use ROA) shows that slack resources along with

© 2018 Global Journals

other control variables strongly explained the operational performance than the performance of investment of assets of firms in Africa (ROA). The F-test of the models are significant with a p-value of 0.00, and we believed that the empirical models used in this study as a whole are correctly specified. We first estimated the model (column 1) without controlling the control variables, industry, and country dummies and then, we run the model (column 2) controlling the control variables, industry, and country dummies and we found the same result.

Available slack and firm performance: We found a positive association between available slack and ROA that supported the organizational theory. There exists a mixed relationship between available slack and ROS. The ROS is positively (significant) and negatively (insignificant) associated with the working capital to sales and the current ratios.

Potential slack and firm performance: We also found a mixed correlation between these variables. The main effect of debt/sales and debt/assets in the fixed regression result was negative and significant, indicating a positive relationship between potential slack and firm's ROA. This result revealed that the fewer the ratios of debt to sales and debt to assets, the better the ROA. To the contrary, we found a significant negative effect of debt/sales, debt/assets, and debt/equity, indicating there exists a positive and significant association of potential slack and operational performance (ROS) of firms in Africa.

Recoverable slack and firm performance: We finally found that recoverable slack is found to have a positive, but not significant and a positive and significant association with ROA and ROS respectively. The results of this study confirmed the first but not the second hypothesis, suggesting that the organizational theory is essential to explain the slack-performance nexus of firms in Africa.

Our study also found evidence in the relationship between control variables and firm performance. Firm size has a positive relationship with ROA and ROS whereas growth has a negative association with ROA and ROS. The relationship between firms' growth and ROS has found to be statistically significant. Our study contributes to the corporate finance literature by providing insight on the slack-performance nexus by controlling institutional developments which hardly controlled by previous studies. The banking sector and the stock market development have been found to have a positive association with firms' ROA. Firms' ROS is found to have a negative association with banking sector development and positive association with stock market development.

The result of this study shows that different types of slack have different influence on the different performance of firms. That is there exists a positive and negative correlation between slacks and performances. This result is consistent with prior studies(Bourgeois III and Singh, 1983, Marlin and Geiger, 2015). Furthermore, Daniel et al. (2004)found varying slack-performance nexus using different measures of slack and performance.

The findings of this study support the organizational theory which is in favor of a positive influences of slack resources on the firms' financial performance. Our study found a positive association between financial slack resources and firms' financial performance in Africa. Particularly, the relationship between available slack and recoverable slack with the firm ROA, and recoverable slack and the ROS of firms provide strong support of the resource-based view of the firm that the availability of financial slack boosts the firms' endeavor to perform well. In other words, slack resources are necessarily helping ensure the long-run survival of firms. The positive relationship between financial slack and firm performance is also an indication that slack resources are an incentive required to boost performance, and is also used for conflict resolution, buffer, and facilitates strategic behavior that enables African firms to test with new strategies such as introducing new products and entering new markets. This study also supported the resource-based view in that managers should look inside the firm to find the resources of competitive advantage, so that resources are helping companies achieve higher organizational performance. This result is also consistent with the empirical studies (Vanacker et al., 2013, Cyert and March, 1963, Bradley et al., 2011, Marlin and Geiger, 2015).The negative impact of financial slack has been observed on the operational performance (ROS), indicating there exists a positive association between potential slack components and ROS of African firms. This result evident that the existence of such slack enhances the firms endeavor to perform well because it helps firms secure resources through debt financing.

b) Mediation analysis (Structural Equation Modeling)

The main contribution of this study is to examine the mediating effects of the banking sector and the stock market developments on the association of financial slack and firm's performance. Growing literature currently advocates the use of bootstrapping for evaluating indirect effects (Lockwood and MacKinnon, 1998, MacKinnon et al., 2004, Shrout and Bolger, 2002, Preacher and Hayes, 2004). Boot strapping is one of several *re-sampling* strategies for mediation estimation and hypothesis testing. Any statistics can use bootstrapping, but this study focuses on the mediation, its standard error and significance level of paths. Thus, we estimated a bootstrapped standard errors and path coefficients with Replications

© 2018 Global Journals

1000. Before we run the mediation, we tested the goodness of fit of the model using a two-index presentation strategy, as suggested by Hu and Bentler (1999). The SRMR less than 0.08 and the RMSEA less than 0.06 shows the goodness of fit of the model. As can be seen from Table 3 the value of SRMR and RMSEA is 0.000 indicating the model fits well. Table 3 shows the estimate of the path observed coefficients, bootstrap standard error, and P-values. We used the banking sector development (M1) and the stock market development (M2) in the model as the mediators on the relationship between the slack and financial performance of firms in Africa. The mediating effects of the banking sector and the stock market development on the relationship between slack and performance is presented in Table 3.

The evidence of mediation exists when the relationship between the dependent and independent variables is partially or fully influenced by the mediating variable(Lockwood and MacKinnon, 1998). That is, mediation exists if the coefficient of a direct path between the independent variable (financial slacks) and the dependent variable (firm performance) is smaller when we included the mediator in the model. Moreover, full mediation exists if the indirect path (a_1b_1 and a_2b_2) is not significant, but the direct path (c') is statistically significant. Partial mediation exists if the direct (c'), indirect (a_1b_1 and a_2b_2) and total (c'+ a_1b_1 and c'+a_2b_2) paths are statistically significant. Strong mediation also exists with significant indirect and insignificant direct effects. The mediating be tested using the coefficient of the indirect path and the p-value. The higher the coefficient and the lower p-value ($p<0.05$),the strong the mediation effect. However, there might be mediation with the small coefficient of indirect paths if the p-value is lower ($p<0.05$).Moreover, the presence of mediating effects can be detected by using the confidence interval of the indirect effects, that is, if the confidence interval of indirect effect contains non-zero, it shows there exists mediation. Based on these arguments we reported the result of bootstrapping as follows.

The coefficient of the indirect effect of the ratio of debt to assets (path a_1b_1) on ROA via the banking sector development, holding the stock market development constant, is -0.00003 and is significant at the 5% level of significance. The direct and total effects of the ratio of debt to assets via the banking sector development, holding the stock market development constant, are the same (-0.061) and statistically significant ($p=0.04$). This result shows that the banking sector development partially mediates the relationship between the ratio of debt to assets and return on assets (ROA) of firms in Africa. More specifically, the ratio of the debt to asset has indirect effect on ROA, that is, a unit increase in the ratio of debt to assets will reduce the ROA by 0.061 units via the banking sector development. The estimates of the direct, indirect and total effects of the current ratio, working capital, and debt to equity, debt to sales and operating expense to sales doesn't confirm any evidence of the mediating effect of the banking sector development on the relationship between the financial slack and the ROA of firms in Africa. For clarity, the coefficients (indirect effects) of the current ratio, working capital, debt to equity, debt to sales, and operating expense to sales are very small (close to zero), and the p-values are too high (non-significant). Table 3 also presents the SEM analysis, using bootstrapping, of path a_2b_2 by introducing the stock market development into the model as a mediator, holding the banking sector development constant. The coefficients of indirect effects (a_2b_2) of all slack variables are significantly small or close to zero with a non significant p-values($p>0.05$) indicating that the relationship between slack and performance of firms in Africa is not strongly mediated by the stock market development. Moreover, the confidence intervals of the indirect effects of slack variables, through the banking sector and the stock market development, on ROA and ROS are close to zero (see the appendix) suggesting there exists a week mediating role of the banking sector and the stock market development on the relationship between slack components and firm performance.

The direct and the total effects of the ratio of operating expense to sales, holding the banking sector constant, on ROS found to be the same and the highest (3.135). However, when we introduce the banking sector development in the model as a mediator, the indirect effect of operating expense to sales become very low (0.000053) and non-significant. The coefficients of the indirect effects of other slack variables are found to be close to zero with the higher p-values ($P>0.05$) suggesting that the banking sector development is not mediating the slack-performance nexus of firms in Africa. Similarly, introducing the stock market development in the model as a mediator, we estimate the indirect effects of financial slack components on the firm's operational performance (ROS). However, we found that the coefficients are too small (almost close to zero) and are an indication that slack-performance relationship is not strongly mediated by the stock market development. However, the result of our study doesn't confirm the third and the fourth hypotheses of the study. That is, both the banking sector and the stock market development have no strong mediating effect on the relationship of slack and performance of firms in Africa. Thus, the third and fourth hypotheses of our study are not confirmed in this study. The pecking order theory suggested that in the presence of asymmetric information in the credit market, firms tend to use their internal sources to support their investment projects. This study found that the preference of firms to use internal sources of finance, for financing investment

© 2018 Global Journals

projects is dependent on the institutional development which can provide external sources of finances. For instance, in countries where the banking sector and stock market are well-developed, firms can easily have external sources of finance and can support their investment with it and can have more financial slack in the form of more retained earnings. But this is not true for firms in Africa because it is due to the immature banking sector and the stock market as we discussed in section 3 of this study.

We also found inconsistent mediation that possibly happened when the sign of the direct (c') and the indirect effects (a_1b_1 or a_2b_2) are opposite (MacKinnon et al., 2007). The direct path of the debt to sales and debt to assets on ROA, through stock market development, is negative. Contrarily, the indirect effects of the same variables with the same mediator on the ROA is positive. We also found the opposite signs of other paths (see Table 3). Inconsistent mediation might be happening when the first step of Baron and Kenny (the dependent variable has a significant relationship with the independent variable) would not be met. However, it has been argued that this step is not the necessary condition of mediation Kenny et al. (1998) because it is not part of the mediation.

Table 2: Fixed effect robust (within) regression

Variables	(1)		(2)	
	ROA	ROS	ROA	ROS
CR	4.04E-05** (4.79E-05)	-0.0004*** (0.0009)	4.06E-05** (4.82E-05)	-0.00051*** (0.00093)
WC	9.13E-07*** (1.47E-06)	0.076253* (0.00137)	8.19E-07*** (2.13E-06)	0.077111* (0.00123)
Debt-Equity	7.87E-06* (4.14E-06)	-0.00056* (7.45E-05)	1.09E-05* (5.92E-06)	-0.00108* (0.000222)
Debt-Sales	-1.7E-05** (1.61E-05)	-0.03826* (0.01576)	-2E-05** (2.25E-05)	-0.04762* (0.014345)
Debt-Assets	-0.06424* (0.017369)	-0.04207* (0.01507)	-0.06395* (0.017579)	-0.01004** (0.013952)
Op.exp	0.000225*** (0.00053)	3.044028* (0.39762)	7.46E-05*** (0.00071)	3.303782* (0.351602)
size			0.097149** (0.096619)	2.398616** (1.8975)
Growth			-4.80E-06** (9.81E-06)	-0.018* (0.005268)
Bank			0.001359** (0.000887)	-0.24363** (0.163697)
Market			0.000447** (0.00033)	0.096777** (0.069304)
_cons	0.090505* (0.013629)	0.803843* (0.15741)	-0.47087** (0.610076)	-7.82082** (10.08582)
Number of obs =	4570	4570	4301	4301
R-sq: within	0.5535	0.9835	0.5590	0.9847
F-test	21.08*	33058.51*	11.95*	58783.04*
Country dummies	No	No	Yes	Yes
Industry dummies	No	No	Yes	Yes

*NB: standard errors are in parentheses, CR is Current ratio, ROA is Return on Assets, ROS is Return on Sales, WC is Working capital, Debt-Equity is the ratio of debt to Equity, Debt-Sales is the ratio of Debt to Sales, Debt-Asset is the ratio of Debt to total assets, Op.exp is the ratio of operating expense to sales, size is the natural logarithm of total assets, growth denotes firm growth, Bank denotes banking sector development, Market is stock market development, * is significant at 1%, ** is significant at 5% and *** is significant at 10%.*

© 2018 Global Journals

Table 3: Mediation analysis (Structural Equation Modeling)

Variables		ROA <-		ROS <-		
	Direct effect (c')	Indirect effect (a_1b_1)	Total effect (c'+a_1b_1)	Direct effect (c')	Indirect effect (a_1b_1)	Total effect (c'+a_1b_1)
Bank (M1)	0.0004* (0.0002)		0.00039* (0.0002)	-0.003 (0.0074)		-0.003 (0.007)
CR	0000282 (0.003)	0.0000015 (0.00002)	0.0000296 (0.003)	0.0002 (0.051)	-0.0000126 (0.0002)	0.00019 (0.051)
WC	0.0000005 (0.00001)	-0.00000002 (0.0000005)	0.0000005 (0.000001)	0.077* (0.037)	0.0000002 (0.000004)	0.077403 (0.037)
Debt-Equity	0000203 (0.0002)	0.0000002 (0.000005)	0.0000205 (0.00002)	0.0008 (0.0029)	-0.0000014 (0.00006)	0.0008 (0.003)
Debt-Sales	-0.0000112 (0.00003)	0.0000004 (0.0000005)	-0.000011 (-0.00003)	-0.036** (0.0305)	-0.0000034 (0.00001)	-0.036 (0.0305)
Debt-Assets	-0.061* (0.03)	-0.00003** (0.000035)	-0.061* (-0.0303)	-0.048** (0.07)	0.0002 (0.0006)	-0.048 (0.07)
Op.exp	0.0004 (0.002)	0.000006 (0.000034)	0.00042 (0.0025)	3.135** (2.49)	-0.000053*** (0.0003)	3.1352*** (2.492)
	Direct effect (c')	Indirect effect (a_2b_2)	Total effect (c'+a_2b_2)	Direct effect (c')	Indirect effect (a_2b_2)	Total effect (c'+a_2b_2)
Market (M2)	0.0000034 (0.0001)		0.000003 (0.00014)	0.0032 (0.0076)		0.0032 (0.0076)
CR	0.00003 (0.003)	0.000000012 (0.000001)	0.00003 (0.0026)	0.0002 (0.04)	0.00001 (0.0012)	0.00019 (0.04)
WC	0.0000005 (0.00001)	0.0000000014	0.0000005 (0.00001)	0.077402* (0.0399)	0.00000135*** (0.00003)	0.0774032 (0.0399)
Debt-Equity	0.00002 (0.0004)	0.000000001 (0.000002)	0.00002 (0.0004)	0.0008 (0.0051)	0.000038 (0.0003)	0.00086 (0.0053)
Debt-Sales	-0.000011 (0.00003)	0.00000002 (0.00004)	-0.000011 (0.00003)	-0.036** (0.0304)	0.00002 (0.00005)	-0.037** (0.0304)
Debt-Assets	-0.06* (0.0309)	0.000001 (0.00004)	-0.06 (0.031)	-0.049*** (0.082)	0.00096 (0.0055)	-0.048 (0.081)
Op.exp	0.0004 (0.003)	0.00000108 (0.00004)	0.0004 (0.003)	3.134** (2.4032)	0.001 (0.0031)	3.135** (2.403)
Obs.	4556			4301		
Replications	1000			1000		
RMSEA	0.000			0.000		
SRMR	0.000			0.000		

*Note: Bootstrap standard error in parentheses next to observed coefficients, CR is Current ratio, ROA is Return on Assets, ROS is Return on Sales, WC is Working capital, Debt-Equity is the ratio of debt to Equity, Debt-Sales is the ratio of Debt to Sales, Debt-Asset is the ratio of Debt to total assets, Op.exp is the ratio of operating expense to sales, Bank is banking sector development, Market is stock market development, * is significant at 1%, ** is significant at 5% and *** is significant at 10%*

VII. Conclusion and Implication

While firm-level data is obtained from the OSIRIS database, the institutional development indexes data is extracted from World Bank. Based on the data availability, the study period covers ten years, from 2006 to 2015.Accordingly, 457 non-financial publicly quoted companies with ten years firm-level data from 2006 to 2015 of 13 African countries were included in the study. We used firm performance as dependent and slack as explanatory variables. While firm performance is measured by ROA and ROS, financial slack are categorized as available, potential, and recoverable slack, and firm size, firm growth, banking sector, and stock market development as control variables. We employed the Hausman specification test that suggested the fixed effect model is the super choice over the random effect model. Thus, we run a fixed effect (within) robust regression, (1) without controlling the control variables, the country, and the industry effect and (2) with controlling control variables, country, and industry effects. Furthermore, we tested the mediation effect of the banking sector and the stock market development on the slack-performance nexus using

© 2018 Global Journals

Structural Equation Modeling (SEM) through bootstrapping.

The result of this study supported the organizational theory which favors positive slack-performance relationship. The first hypothesis of this study assumed a positive correlation between financial slack and firms' financial performance. The result of our study doesn't confirm this hypothesis because the association is mixed. We found no strong association between available slack and ROA. Potential slack is found to have a strong relationship with ROA and ROS. More specifically, the ratio of debt to equity has a strong relationship with the ROA, and the ROS. We also found that the ratio of debt to assets has a strong relationship with the ROA and the ROS. Debt to sales has statistically strong and negative correlation with operational performance (ROS) of firms. Recoverable slack is found to have statistically strong and positive relationship with ROS and has no strong relationship with ROA. The mediation analysis using Structural Equation Modeling revealed that both the banking sector and the stock market developments have no strong mediating effects on the financial slack and firm performance of firms in Africa.

Concerning the relationship between financial slack and firm performance, our finding implied that this result might not behold true in a universal context, but it is definitely dependent upon the environment in which the firms are embedded. Thus, our study offers some managerial implication for policy formulations. First, given the result that slack resources have a positive association with firms' operational performance (ROS) and financial performance (ROA), it is indicative that African firms need to strengthen the monitoring mechanism such as corporate governance to boost the commitments of those resources. The effective corporate governance mechanism help firms enhance the optimum use of financial resources to enhance performance. We found no evidence of mediation effect of the institutional development on the slack-performance nexus of firms in Africa. We further compared theses institutional developments (banking sector and the stock market of Africa) with of Asia, Europe, and World average. Both the stock market and the banking sector development of Africa lags behind the Asia's, Europe, and even world average. Hence, it is imperative to improve the institutional development in Africa. A well developed banking sector and stock market helps secure the external financing(debt and equity) so that firms will have sufficient internal sources of finance (slack) in the form of retaining earnings which can support both the financial and operational performance of firms in Africa.

References Références Referencias

1. AGARWAL, S. & MOHTADI, H. 2004. Financial markets and the financing choice of firms: Evidence from developing countries. *Global Finance Journal,* 15, 57-70.
2. ALESSANDRI, T., CERRATO, D. & DEPPERU, D. 2014. Organizational slack, experience, and acquisition behavior across varying economic environments. *Management Decision,* 52, 967-982.
3. ALTAF, N. & SHAH, F. 2017. Slack heterogeneity and firm performance: Investigating the relationship in Indian context. *Research in International Business and Finance,* 42, 390-403.
4. ARGILÉS-BOSCH, J. M., GARCIA-BLANDON, J. & MARTINEZ-BLASCO, M. 2016. The impact of absorbed and unabsorbed slack on firm profitability: Implications for resource redeployment. *Resource redeployment and corporate strategy.* Emerald Group Publishing Limited.
5. BARNARD, C. I. 1968. *The functions of the executive*, Harvard university press.
6. BOLLEN, K. A. & STINE, R. 1990. Direct and indirect effects: Classical and bootstrap estimates of variability. *Sociological methodology*, 115-140.
7. BOURGEOIS III, L. J. & SINGH, J. V. Organizational Slack and Political Behavior Among Top Management Teams. Academy of management proceedings, 1983. Academy of Management Briarcliff Manor, NY 10510, 43-47.
8. BOURGEOIS, L. J. 1981. On the measurement of organizational slack. *Academy of Management review,* 6, 29-39.
9. BRADLEY, S. W., SHEPHERD, D. A. & WIKLUND, J. 2011. The importance of slack for new organizations facing 'tough'environments. *Journal of Management Studies,* 48, 1071-1097.
10. BROMILEY, P. 1991. Testing a causal model of corporate risk taking and performance. *Academy of Management journal,* 34, 37-59.
11. CHEN, W. R. & MILLER, K. D. 2007. Situational and institutional determinants of firms' R & D search intensity. *Strategic Management Journal,* 28, 369-381.
12. CROWLEY, S. L. & FAN, X. 1997. Structural equation modeling: Basic concepts and applications in personality assessment research. *Journal of personality assessment,* 68, 508-531.
13. CYERT, R. M. & MARCH, J. G. 1963. A behavioral theory of the firm. *Englewood Cliffs, NJ,* 2.
14. DANIEL, F., LOHRKE, F. T., FORNACIARI, C. J. & TURNER, R. A. 2004. Slack resources and firm performance: a meta-analysis. *Journal of Business Research,* 57, 565-574.

© 2018 Global Journals

15. DANNEELS, E. 2008. Organizational antecedents of second-order competences. *Strategic Management Journal,* 29, 519-543.
16. DAVIS, G. F. & STOUT, S. K. 1992. Organization theory and the market for corporate control: A dynamic analysis of the characteristics of large takeover targets, 1980-1990. *Administrative Science Quarterly*, 605-633.
17. DEMIRGÜÇ-KUNT, A. & LEVINE, R. 1996. Stock markets, corporate finance, and economic growth: an overview. *The World Bank Economic Review,* 10, 223-239.
18. DEMIRGÜÇ-KUNT, A. & MAKSIMOVIC, V. 1996a. Stock market development and corporate finance decisions. *Finance and Development-English Edition,* 33, 47-49.
19. DEMIRGÜÇ-KUNT, A. & MAKSIMOVIC, V. 1996b. Stock market development and financing choices of firms. *The World Bank Economic Review,* 10, 341-369.
20. DIMICK, D. E. & MURRAY, V. V. 1978. Correlates of substantive policy decisions in organizations: The case of human resource management. *Academy of Management Journal,* 21, 611-623.
21. ETUDAIYE-MUHTAR, O. F. & AHMAD, R. 2014. Banking Sector Development and Corporate Leverage: Empirical Evidence from South African Firms. *International Journal of Economics and Finance,* 6, 278.
22. FAFCHAMPS, M. & SCHÜNDELN, M. 2013. Local financial development and firm performance: Evidence from Morocco. *Journal of Development Economics,* 103, 15-28.
23. FAMA, E. F. 1980. Agency problems and the theory of the firm. *Journal of political economy,* 88, 288-307.
24. FRAZIER, P. A., TIX, A. P. & BARRON, K. E. 2004. Testing moderator and mediator effects in counseling psychology research. *Journal of counseling psychology,* 51, 115.
25. GALBRAITH, J. R. 2007. Designing Complex Organizations (Addison-Wesley series on organization development).
26. GEIGER, S. W. & CASHEN, L. H. 2002. A multidimensional examination of slack and its impact on innovation. *Journal of Managerial Issues*, 68-84.
27. GEOFFREY LOVE, E. & NOHRIA, N. 2005. Reducing slack: The performance consequences of downsizing by large industrial firms, 1977–93. *Strategic Management Journal,* 26, 1087-1108.
28. GEORGE, G. 2005. Slack resources and the performance of privately held firms. *Academy of Management Journal,* 48, 661-676.
29. HAYES, A. F. 2009. Beyond Baron and Kenny: Statistical mediation analysis in the new millennium. *Communication monographs,* 76, 408-420.
30. HU, L. T. & BENTLER, P. M. 1999. Cutoff criteria for fit indexes in covariance structure analysis: Conventional criteria versus new alternatives. *Structural equation modeling: a multidisciplinary journal,* 6, 1-55.
31. HUANG, J.-W. & LI, Y.-H. 2012. Slack resources in team learning and project performance. *Journal of Business Research,* 65, 381-388.
32. JENSEN, M. C. 1986. Agency costs of free cash flow, corporate finance, and takeovers. *The American economic review,* 76, 323-329.
33. JENSEN, M. C. & MECKLING, W. H. 1976. Theory of the firm: Managerial behavior, agency costs and ownership structure. *Journal of financial economics,* 3, 305-360.
34. KENNY, D., KASHY, D. & BOLGER, N. 1998. Data analysis in social psychology (In D. Gilbert, S. Fiske, & G. Lindzey (Eds.). The handbook of social psychology (Vol. 1, pp. 233–265). Boston, MA: McGraw-Hill.
35. KIM, H., KIM, H. & LEE, P. M. 2008. Ownership structure and the relationship between financial slack and R & D investments: Evidence from Korean firms. *Organization Science,* 19, 404-418.
36. LATHAM, S. F. & BRAUN, M. 2009. Managerial risk, innovation, and organizational decline. *Journal of Management,* 35, 258-281.
37. LEE, C. L. & WU, H. C. 2016. How do slack resources affect the relationship between R & D expenditures and firm performance? *R&D Management,* 46, 958-978.
38. LEECH, N. L., BARRETT, K. C. & MORGAN, G. A. 2005. *SPSS for intermediate statistics: Use and interpretation*, Psychology Press.
39. LEIBENSTEIN, H. 1969. Organizational or frictional equilibria, X-efficiency, and the rate of innovation. *The Quarterly Journal of Economics,* 83, 600-623.
40. LIN, W.-T., CHENG, K.-Y. & LIU, Y. 2009. Organizational slack and firm's internationalization: A longitudinal study of high-technology firms. *Journal of World Business,* 44, 397-406.
41. LIU, H., DING, X.-H., GUO, H. & LUO, J.-H. 2014. How does slack affect product innovation in high-tech Chinese firms: The contingent value of entrepreneurial orientation. *Asia Pacific Journal of Management,* 31, 47-68.
42. LOCKWOOD, C. M. & MACKINNON, D. P. Bootstrapping the standard error of the mediated effect. Proceedings of the 23rd annual meeting of SAS Users Group International, 1998. 997-1002.
43. MA, X., TONG, T. W. & FITZA, M. 2012. How much does subnational region matter to foreign subsidiary performance? Evidence from Fortune Global 500

© 2018 Global Journals

Corporations' investment in China. *Journal of International Business Studies,* 44, 66-87.
44. MACKINNON, D. P., FAIRCHILD, A. J. & FRITZ, M. S. 2007. Mediation analysis. *Annu. Rev. Psychol.,* 58, 593-614.
45. MACKINNON, D. P., KRULL, J. L. & LOCKWOOD, C. M. 2000. Equivalence of the mediation, confounding and suppression effect. *Prevention science,* 1, 173-181.
46. MACKINNON, D. P., LOCKWOOD, C. M., HOFFMAN, J. M., WEST, S. G. & SHEETS, V. 2002. A comparison of methods to test mediation and other intervening variable effects. *Psychological methods,* 7, 83.
47. MACKINNON, D. P., LOCKWOOD, C. M. & WILLIAMS, J. 2004. Confidence limits for the indirect effect: Distribution of the product and resampling methods. *Multivariate behavioral research,* 39, 99-128.
48. MARCH, J. G. & SIMON, H. A. 1958. Organizations Wiley. *New York,* 262.
49. MARLIN, D. & GEIGER, S. W. 2015. The organizational slack and performance relationship: a configurational approach. *Management Decision,* 53, 2339-2355.
50. MASOUD, N. & HARDAKER, G. 2014. Stock market development, banks and firms growth: empirical evidence from Saudi Arabia. *International Journal of Economics and Finance,* 6, 159.
51. MCDONALD, R. P. & HO, M.-H. R. 2002. Principles and practice in reporting structural equation analyses. *Psychological methods,* 7, 64.
52. MOUSA, F.-T., MARLIN, D. & RITCHIE, W. J. 2013. Configurations of slack and their performance implications: an examination of high-tech IPOs. *Management Decision,* 51, 225-247.
53. MUMTAZ ALI MEMONA, J.-H. C., T. RAMAYAHC & CHUAHE, H. T. A. F. 2018. MEDIATION ANALYSIS: ISSUES AND RECOMMENDATIONS. *Journal of Applied Structural Equation Modeling: 2(1), i-ix, January 2018,* 2.
54. NGARE, E., NYAMONGO, E. M. & MISATI, R. N. 2014. Stock market development and economic growth in Africa. *Journal of Economics and Business,* 74, 24-39.
55. NOHRIA, N. & GULATI, R. 1997. What is the optimum amount of organizational slack?: A study of the relationship between slack and innovation in multinational firms. *European Management Journal,* 15, 603-611.
56. PENG, M. W., LI, Y., XIE, E. & SU, Z. 2010. CEO duality, organizational slack, and firm performance in China. *Asia Pacific Journal of Management,* 27, 611-624.
57. PENROSE, E. T. 2009. *The Theory of the Growth of the Firm*, Oxford university press.
58. PERA, E. 2014. Sub-Saharan Africa banking review: A review of the 2014 calendar year *EY Africa.*
59. PFEFFER, J. & SALANCIK, G. R. 1978. The external control of organisations. *New York,* 175.
60. PICOLO, J. D., DAL MAGRO, C. B., DA SILVA, T. P. & BERNARDO, L. 2017. The influence of the financial slack on the economical performance of Brazilian and Chilean companies. *Cuadernos de Economía*.
61. PREACHER, K. J. & HAYES, A. F. 2004. SPSS and SAS procedures for estimating indirect effects in simple mediation models. *Behavior research methods, instruments, & computers,* 36, 717-731.
62. RUNGTUSANATHAM, M., MILLER, J. & BOYER, K. 2014. Theorizing, testing, and concluding for mediation in SCM research: Tutorial and procedural recommendations. *Journal of Operations Management,* 32, 99-113.
63. SHAHZAD, A. M., MOUSA, F. T. & SHARFMAN, M. P. 2016. The implications of slack heterogeneity for the slack-resources and corporate social performance relationship. *Journal of Business Research,* 69, 5964-5971.
64. SHARFMAN, M. P., WOLF, G., CHASE, R. B. & TANSIK, D. A. 1988. Antecedents of organizational slack. *Academy of Management review,* 13, 601-614.
65. SHROUT, P. E. & BOLGER, N. 2002. Mediation in experimental and nonexperimental studies: new procedures and recommendations. *Psychological methods,* 7, 422.
66. SINGH, J. V. 1986. Performance, slack, and risk taking in organizational decision making. *Academy of management Journal,* 29, 562-585.
67. SOBEL, M. E. 1982. Asymptotic confidence intervals for indirect effects in structural equation models. *Sociological methodology,* 13, 290-312.
68. STAN, C. V., PENG, M. W. & BRUTON, G. D. 2014. Slack and the performance of state-owned enterprises. *Asia Pacific Journal of Management,* 31, 473-495.
69. TAN, J. 2003. Curvilinear relationship between organizational slack and firm performance:: Evidence from Chinese state enterprises. *European Management Journal,* 21, 740-749.
70. TAN, J. & PENG, M. W. 2003. Organizational slack and firm performance during economic transitions: Two studies from an emerging economy. *Strategic Management Journal,* 24, 1249-1263.
71. THOMPSON, F. T. & LEVINE, D. U. 1997. Examples of easily explainable suppressor variables in multiple regression research. *Multiple Linear Regression Viewpoints,* 24, 11-13.
72. THOMPSON, J. D. 1967. *Organizations in action: Social science bases of administrative theory*, Transaction publishers.

© 2018 Global Journals

73. VANACKER, T., COLLEWAERT, V. & PAELEMAN, I. 2013. The relationship between slack resources and the performance of entrepreneurial firms: The role of venture capital and angel investors. *Journal of Management Studies,* 50, 1070-1096.
74. VOSS, G. B., SIRDESHMUKH, D. & VOSS, Z. G. 2008. The effects of slack resources and environmentalthreat on product exploration and exploitation. *Academy of Management Journal,* 51, 147-164.
75. WAN, W. P. & YIU, D. W. 2009. From crisis to opportunity: Environmental jolt, corporate acquisitions, and firm performance. *Strategic Management Journal,* 30, 791-801.
76. WIERSMA, E. 2017a. How and when do firms translate slack into better performance? *The British Accounting Review,* 49, 445-459.
77. WIERSMA, E. 2017b. How and when do firms translate slack into better performance? *The British Accounting Review*.
78. YANG, Y. & CHEN, J. 2017. Do slack resources matter in Chinese firms' collaborative innovation? *International Journal of Innovation Studies*.
79. YUAN, Y. & MACKINNON, D. P. 2009. Bayesian mediation analysis. *Psychological methods,* 14, 301.

Appendix

Table 4: Banking sector development as mediator of slack and ROA (SEM analysis with bootstrapping)

	Direct effects					
				Normal-based		
	Observed Coef.	Bootstrap Std. Err.	z	P>z	[95%Conf.	Interval]
structural						
Bank (M_1)<-						
CR	0.0037208	0.050512	0.07	0.941	-0.095281	0.1027227
WC	-0.0000599	0.001314	-0.05	0.964	-0.002636	0.002516
Debt-Equity	0.0004054	0.01201	0.03	0.973	-0.023133	0.0239441
Debt-Sales	0.0010033	0.001387	0.72	0.469	-0.001715	0.0037216
Debt-Assets	-0.073036	0.082309	-0.89	0.375	-0.234359	0.0882874
Op.exp	0.0155414	0.08669	0.18	0.858	-0.154367	0.1854502
ROA<-						
Bank (M_1)	0.0003944	0.000176	2.24	0.025	0.0000491	0.0007397
CR	0.0000282	0.002593	0.01	0.991	-0.005054	0.0051102
WC	5.15E-07	1.15E-05	0.04	0.964	-2.21E-05	0.0000231
Debt-Equity	0.0000203	0.000228	0.09	0.929	-0.000426	0.0004669
Debt-Sales	-0.0000112	3.36E-05	-0.33	0.739	-7.71E-05	0.0000547
Debt-Assets	-0.0606111	0.030319	-2	0.046	-0.120036	-0.001186
Op.exp	0.0004159	0.002461	0.17	0.866	-0.004407	0.0052391
	Indirect effects					
ROA<-						
Bank (M_1)	0	(no path)				
CR	1.47E-06	1.98E-05	0.07	0.941	-3.73E-05	0.0000402
WC	-2.36E-08	5.18E-07	-0.05	0.964	-1.04E-06	9.92E-07
Debt-Equity	1.60E-07	4.74E-06	0.03	0.973	-9.13E-06	9.45E-06
Debt-Sales	3.96E-07	5.77E-07	0.69	0.493	-7.36E-07	1.53E-06
Debt-Assets	-0.0000288	3.49E-05	-0.82	0.41	-9.73E-05	0.0000397
Op.exp	6.13E-06	3.42E-05	0.18	0.858	-6.08E-05	0.0000731
	Total effects					
Structural						
Bank (M_1) <-						
CR	0.0037208	0.050512	0.07	0.941	-0.095281	0.1027227
WC	-0.0000599	0.001314	-0.05	0.964	-0.002636	0.002516
Debt-Equity	0.0004054	0.01201	0.03	0.973	-0.023133	0.0239441
Debt-Sales	0.0010033	0.001387	0.72	0.469	-0.001715	0.0037216
Debt-Assets	-0.073036	0.082309	-0.89	0.375	-0.234359	0.0882874
Op.exp	0.0155414	0.08669	0.18	0.858	-0.154367	0.1854502
ROA<-						
Bank (M_1)	0.0003944	0.000176	2.24	0.025	0.0000491	0.0007397

© 2018 Global Journals

CR	0.0000296	0.002606	0.01	0.991	-0.005078	0.0051367
WC	4.91E-07	1.12E-05	0.04	0.965	-2.15E-05	0.0000225
Debt-Equity	0.0000205	0.000231	0.09	0.929	-0.000431	0.0004723
Debt-Sales	-0.0000108	3.33E-05	-0.32	0.746	-7.61E-05	0.0000545
Debt-Assets	-0.0606399	0.030318	-2	0.045	-0.120062	-0.001218
Op.exp	0.000422	0.002473	0.17	0.864	-0.004425	0.0052688

Table 5: Stock market development as mediator of slack and ROA (SEM analysis with bootstrapping)

	Direct effects					
				Normal-based		
	Observed Coef.	Bootstrap Std. Err.	z	P>z	[95%Conf.	Interval
Structural						
Market (M_2)<-						
CR	0.0035397	0.35819	0.01	0.992	-0.698499	0.7055782
WC	0.0004192	0.010499	0.04	0.968	-0.020158	0.0209968
Debt-Equity	0.0117193	0.072192	0.16	0.871	-0.129775	0.1532133
Debt-Sales	0.0062141	0.009045	0.69	0.492	-0.011513	0.0239409
Debt-Assets	0.2973973	1.474919	0.2	0.84	-2.59339	3.188185
Op.exp	0.3142367	0.684712	0.46	0.646	-1.027773	1.656247
ROA<-						
Market (M_2)	3.44E-06	0.000138	0.02	0.98	-0.000266	0.0002731
CR	0.0000295	0.002601	0.01	0.991	-0.005069	0.0051281
WC	4.81E-07	1.13E-05	0.04	0.966	-2.17E-05	0.0000226
Debt-Equity	0.0000206	0.000438	0.05	0.963	-0.000838	0.0008791
Debt-Sales	-0.0000107	3.42E-05	-0.31	0.754	-7.77E-05	0.0000563
Debt-Assets	-0.0606297	0.030903	-1.96	0.05	-0.121197	-0.000062
Op.exp	0.0004138	0.00288	0.14	0.886	-0.005231	0.006059
	Indirect effects					
ROA<-						
Market (M_2)	0	(no path)				
CR	1.22E-08	1.28E-06	0.01	0.992	-2.50E-06	2.52E-06
WC	1.44E-09	(constrained)				
Debt-Equity	4.03E-08	1.64E-06	0.02	0.98	-3.17E-06	3.25E-06
Debt-Sales	2.14E-08	8.56E-07	0.02	0.98	-1.66E-06	1.70E-06
Debt-Assets	1.02E-06	3.87E-05	0.03	0.979	-7.49E-05	0.0000769
Op.exp	1.08E-06	4.33E-05	0.02	0.98	-8.37E-05	0.0000859
	Total effects					
Structural						
Market (M_2) <-						
CR	0.0035397	0.35819	0.01	0.992	-0.698499	0.7055782
WC	0.0004192	0.010499	0.04	0.968	-0.020158	0.0209968
Debt-Equity	0.0117193	0.072192	0.16	0.871	-0.129775	0.1532133
Debt-Sales	0.0062141	0.009045	0.69	0.492	-0.011513	0.0239409
Debt-Assets	0.2973973	1.474919	0.2	0.84	-2.59339	3.188185
Op.exp	0.3142367	0.684712	0.46	0.646	-1.027773	1.656247
ROA<-						
Market (M_2)	3.44E-06	0.000138	0.02	0.98	-0.000266	0.0002731
CR	0.0000295	0.002602	0.01	0.991	-0.005071	0.0051298
WC	4.83E-07	1.13E-05	0.04	0.966	-2.16E-05	0.0000226
Debt-Equity	0.0000206	0.000438	0.05	0.962	-0.000839	0.0008798
Debt-Sales	-0.0000107	0.000034	-0.31	0.753	-7.74E-05	0.000056
Debt-Assets	-0.0606287	0.030881	-1.96	0.05	-0.121155	-0.000103
Op.exp	0.0004149	0.002873	0.14	0.885	-0.005217	0.0060465

© 2018 Global Journals

Table 6: Banking sector development as mediator of slack and ROS (SEM analysis with bootstrapping)

	Direct effects					
				Normal-based		
	Observed Coef.	Bootstrap Std. Err.	z	P>z	[95%Conf.	Interval
Structural						
Bank (M_1)<-						
CR	0.0037208	0.053181	0.07	0.944	-0.100512	0.1079533
WC	-0.0000599	0.001241	-0.05	0.962	-0.002493	0.002373
Debt-Equity	0.0004054	0.016852	0.02	0.981	-0.032625	0.0334354
Debt-Sales	0.0010033	0.001615	0.62	0.534	-0.002162	0.0041681
Debt-Assets	-0.073036	0.078848	-0.93	0.354	-0.227576	0.0815037
Op.exp	0.0155414	0.093513	0.17	0.868	-0.167742	0.1988243
ROS<-						
Bank (M_1)	-0.0033846	0.007374	-0.46	0.646	-0.017838	0.0110686
CR	0.0002059	0.050865	0	0.997	-0.099487	0.0998992
WC	0.0774029	0.036945	2.1	0.036	0.0049919	0.1498139
Debt-Equity	0.0008275	0.002867	0.29	0.773	-0.004792	0.0064467
Debt-Sales	-0.0366469	0.030454	-1.2	0.229	-0.096336	0.0230417
Debt-Assets	-0.0488627	0.069623	-0.7	0.483	-0.185322	0.0875964
Op.exp	3.135279	2.491808	1.26	0.208	-1.748575	8.019134
	Indirect effects					
ROS<-						
Bank (M_1)	0	(no path)				
CR	-0.0000126	0.000186	-0.07	0.946	-0.000376	0.0003512
WC	2.03E-07	4.25E-06	0.05	0.962	-8.12E-06	8.53E-06
Debt-Equity	-1.37E-06	0.000057	-0.02	0.981	-0.000113	0.0001103
Debt-Sales	-3.40E-06	9.58E-06	-0.35	0.723	-2.22E-05	0.0000154
Debt-Assets	0.0002472	0.000585	0.42	0.673	-0.000899	0.0013936
Op.exp	-0.0000526	0.000347	-0.15	0.879	-0.000732	0.0006267
	Total effects					
Structural						
Bank (M_1)<-						
CR	0.0037208	0.053181	0.07	0.944	-0.100512	0.1079533
WC	-0.0000599	0.001241	-0.05	0.962	-0.002493	0.002373
Debt-Equity	0.0004054	0.016852	0.02	0.981	-0.032625	0.0334354
Debt-Sales	0.0010033	0.001615	0.62	0.534	-0.002162	0.0041681
Debt-Assets	-0.073036	0.078848	-0.93	0.354	-0.227576	0.0815037
Op.exp	0.0155414	0.093513	0.17	0.868	-0.167742	0.1988243
ROS<-						
Bank (M_1)	-0.0033846	0.007374	-0.46	0.646	-0.017838	0.0110686
CR	0.0001933	0.050795	0	0.997	-0.099363	0.09975
WC	0.0774031	0.036946	2.1	0.036	0.0049913	0.1498149
Debt-Equity	0.0008261	0.002842	0.29	0.771	-0.004744	0.0063963
Debt-Sales	-0.0366503	0.030452	-1.2	0.229	-0.096334	0.0230337
Debt-Assets	-0.0486155	0.069624	-0.7	0.485	-0.185075	0.0878442
Op.exp	3.135227	2.491741	1.26	0.208	-1.748496	8.01895

© 2018 Global Journals

Table 7: Stock market development as mediator of slack and ROS (SEM analysis with bootstrapping)

	Direct effects					
				Normal-based		
	Observed Coef.	Bootstrap Std. Err.	z	P>z	[95%Conf.	Interval
Structural						
Market (M_2) <-						
CR	0.0035397	0.373759	0.01	0.992	-0.729014	0.7360938
WC	0.0004192	0.010162	0.04	0.967	-0.019498	0.0203363
Debt-Equity	0.0117193	0.080062	0.15	0.884	-0.1452	0.1686386
Debt-Sales	0.0062141	0.009506	0.65	0.513	-0.012418	0.0248459
Debt-Assets	0.2973973	1.529025	0.19	0.846	-2.699438	3.294232
Op.exp	0.3142367	0.581213	0.54	0.589	-0.824921	1.453394
ROS <-						
Market (M_2)	0.0032189	0.007603	0.42	0.672	-0.011683	0.0181209
CR	0.0001794	0.039557	0	0.996	-0.07735	0.0777088
WC	0.0774018	0.039902	1.94	0.052	-0.000805	0.1556083
Debt-Equity	0.0008244	0.005141	0.16	0.873	-0.009251	0.0108997
Debt-Sales	-0.0366724	0.030392	-1.21	0.228	-0.09624	0.0228947
Debt-Assets	-0.0496291	0.08174	-0.61	0.544	-0.209837	0.1105786
Op.exp	3.13427	2.403235	1.3	0.192	-1.575984	7.844523
	Indirect effects					
ROS <-						
Market (M_2)	0	(no path)				
CR	0.0000114	0.001202	0.01	0.992	-0.002344	0.0023667
WC	1.35E-06	3.31E-05	0.04	0.967	-6.35E-05	0.0000662
Debt-Equity	0.0000377	0.000272	0.14	0.89	-0.000496	0.0005714
Debt-Sales	0.00002	5.54E-05	0.36	0.718	-8.85E-05	0.0001285
Debt-Assets	0.0009573	0.005486	0.17	0.861	-0.009794	0.011709
Op.exp	0.0010115	0.003103	0.33	0.744	-0.005071	0.007094
	Total effects					
Structural						
Market (M_2)<-						
CR	0.0035397	0.373759	0.01	0.992	-0.729014	0.7360938
WC	0.0004192	0.010162	0.04	0.967	-0.019498	0.0203363
Debt-Equity	0.0117193	0.080062	0.15	0.884	-0.1452	0.1686386
Debt-Sales	0.0062141	0.009506	0.65	0.513	-0.012418	0.0248459
Debt-Assets	0.2973973	1.529025	0.19	0.846	-2.699438	3.294232
Op.exp	0.3142367	0.581213	0.54	0.589	-0.824921	1.453394
ROS <-						
Market (M_2)	0.0032189	0.007603	0.42	0.672	-0.011683	0.0181209
CR	0.0001908	0.039945	0	0.996	-0.0781	0.0784821
WC	0.0774032	0.039903	1.94	0.052	-0.000804	0.1556108
Debt-Equity	0.0008621	0.00527	0.16	0.87	-0.009467	0.0111916
Debt-Sales	-0.0366524	0.0304	-1.21	0.228	-0.096235	0.0229302
Debt-Assets	-0.0486718	0.080687	-0.6	0.546	-0.206815	0.1094712
Op.exp	3.135281	2.402844	1.3	0.192	-1.574207	7.84477

© 2018 Global Journals