Online ISSN : 2249-4588
Print ISSN : 0975-5853

Global Journal

of Management and Business Research: D

Accounting and Auditing

Highlights

Tunisian Stock Market

Impact of the Managerial

Analysis on the Impact

Budgeting & Procedural Fairness

Discovering Thoughts, Inventing Future

VOLUME 14 ISSUE 5 VERSION 1.0

© 2001-2014 by Global Journal of Management and Business Research , USA

Global Journal of Management and Business Research: D
Accounting and Auditing

Global Journal of Management and Business Research: D
Accounting and Auditing

Volume 14 Issue 5 (Ver. 1.0)

Open Association of Research Society

© Global Journal of Management and Business Research. 2014.

All rights reserved.

This is a special issue published in version 1.0 of "Global Journal of Science Frontier Research." By Global Journals Inc.

All articles are open access articles distributed under "Global Journal of Science Frontier Research"

Reading License, which permits restricted use. Entire contents are copyright by of "Global Journal of Science Frontier Research" unless otherwise noted on specific articles.

No part of this publication may be reproduced or transmitted in any form or by any means, electronic or mechanical, including photocopy, recording, or any information storage and retrieval system, without written permission.

The opinions and statements made in this book are those of the authors concerned. Ultraculture has not verified and neither confirms nor denies any of the foregoing and no warranty or fitness is implied.

Engage with the contents herein at your own risk.

The use of this journal, and the terms and conditions for our providing information, is governed by our Disclaimer, Terms and Conditions and Privacy Policy given on our website http://globaljournals.us/terms-and-condition/menu-id-1463/

By referring / using / reading / any type of association / referencing this journal, this signifies and you acknowledge that you have read them and that you accept and will be bound by the terms thereof.

All information, journals, this journal, activities undertaken, materials, services and our website, terms and conditions, privacy policy, and this journal is subject to change anytime without any prior notice.

Incorporation No.: 0423089
License No.: 42125/022010/1186
Registration No.: 430374
Import-Export Code: 1109007027
Employer Identification Number (EIN):
USA Tax ID: 98-0673427

Global Journals Inc.

*(A Delaware USA Incorporation with "Good Standing"; **Reg. Number: 0423089**)*

Sponsors: Open Association of Research Society
Open Scientific Standards

Publisher's Headquarters office

Global Journals Headquarters
301st Edgewater Place Suite, 100 Edgewater Dr.-Pl,
Wakefield MASSACHUSETTS, Pin: 01880,
United States of America
USA Toll Free: +001-888-839-7392
USA Toll Free Fax: +001-888-839-7392

Offset Typesetting

Global Journals Incorporated
2nd, Lansdowne, Lansdowne Rd., Croydon-Surrey,
Pin: CR9 2ER, United Kingdom

Packaging & Continental Dispatching

Global Journals
E-3130 Sudama Nagar, Near Gopur Square,
Indore, M.P., Pin:452009, India

Find a correspondence nodal officer near you

To find nodal officer of your country, please email us at *local@globaljournals.org*

eContacts

Press Inquiries: *press@globaljournals.org*
Investor Inquiries: *investors@globaljournals.org*
Technical Support: *technology@globaljournals.org*
Media & Releases: *media@globaljournals.org*

Pricing (Including by Air Parcel Charges):

For Authors:
22 USD (B/W) & 50 USD (Color)
Yearly Subscription (Personal & Institutional):
200 USD (B/W) & 250 USD (Color)

Integrated Editorial Board
(Computer Science, Engineering, Medical, Management, Natural Science, Social Science)

John A. Hamilton,"Drew" Jr.,
Ph.D., Professor, Management
Computer Science and Software Engineering
Director, Information Assurance Laboratory
Auburn University

Dr. Henry Hexmoor
IEEE senior member since 2004
Ph.D. Computer Science, University at Buffalo
Department of Computer Science
Southern Illinois University at Carbondale

Dr. Osman Balci, Professor
Department of Computer Science
Virginia Tech, Virginia University
Ph.D.and M.S.Syracuse University, Syracuse, New York
M.S. and B.S. Bogazici University, Istanbul, Turkey

Yogita Bajpai
M.Sc. (Computer Science), FICCT
U.S.A.Email:
yogita@computerresearch.org

Dr. T. David A. Forbes
Associate Professor and Range Nutritionist
Ph.D. Edinburgh University - Animal Nutrition
M.S. Aberdeen University - Animal Nutrition
B.A. University of Dublin- Zoology

Dr. Wenying Feng
Professor, Department of Computing & Information Systems
Department of Mathematics
Trent University, Peterborough,
ON Canada K9J 7B8

Dr. Thomas Wischgoll
Computer Science and Engineering,
Wright State University, Dayton, Ohio
B.S., M.S., Ph.D.
(University of Kaiserslautern)

Dr. Abdurrahman Arslanyilmaz
Computer Science & Information Systems Department
Youngstown State University
Ph.D., Texas A&M University
University of Missouri, Columbia
Gazi University, Turkey

Dr. Xiaohong He
Professor of International Business
University of Quinnipiac
BS, Jilin Institute of Technology; MA, MS, PhD,. (University of Texas-Dallas)

Burcin Becerik-Gerber
University of Southern California
Ph.D. in Civil Engineering
DDes from Harvard University
M.S. from University of California, Berkeley & Istanbul University

Dr. Bart Lambrecht
Director of Research in Accounting and FinanceProfessor of Finance
Lancaster University Management School
BA (Antwerp); MPhil, MA, PhD (Cambridge)

Dr. Carlos García Pont
Associate Professor of Marketing
IESE Business School, University of Navarra
Doctor of Philosophy (Management), Massachusetts Institute of Technology (MIT)
Master in Business Administration, IESE, University of Navarra
Degree in Industrial Engineering, Universitat Politècnica de Catalunya

Dr. Fotini Labropulu
Mathematics - Luther College
University of ReginaPh.D., M.Sc. in Mathematics
B.A. (Honors) in Mathematics
University of Windso

Dr. Lynn Lim
Reader in Business and Marketing
Roehampton University, London
BCom, PGDip, MBA (Distinction), PhD, FHEA

Dr. Mihaly Mezei
ASSOCIATE PROFESSOR
Department of Structural and Chemical Biology, Mount Sinai School of Medical Center
Ph.D., Etvs Lornd University
Postdoctoral Training,
New York University

Dr. Söhnke M. Bartram
Department of Accounting and FinanceLancaster University Management SchoolPh.D. (WHU Koblenz)
MBA/BBA (University of Saarbrücken)

Dr. Miguel Angel Ariño
Professor of Decision Sciences
IESE Business School
Barcelona, Spain (Universidad de Navarra)
CEIBS (China Europe International Business School).
Beijing, Shanghai and Shenzhen
Ph.D. in Mathematics
University of Barcelona
BA in Mathematics (Licenciatura)
University of Barcelona

Philip G. Moscoso
Technology and Operations Management
IESE Business School, University of Navarra
Ph.D in Industrial Engineering and Management, ETH Zurich
M.Sc. in Chemical Engineering, ETH Zurich

Dr. Sanjay Dixit, M.D.
Director, EP Laboratories, Philadelphia VA Medical Center
Cardiovascular Medicine - Cardiac Arrhythmia
Univ of Penn School of Medicine

Dr. Han-Xiang Deng
MD., Ph.D
Associate Professor and Research Department Division of Neuromuscular Medicine
Davee Department of Neurology and Clinical NeuroscienceNorthwestern University Feinberg School of Medicine

Dr. Pina C. Sanelli
Associate Professor of Public Health
Weill Cornell Medical College
Associate Attending Radiologist
NewYork-Presbyterian Hospital
MRI, MRA, CT, and CTA
Neuroradiology and Diagnostic Radiology
M.D., State University of New York at Buffalo,School of Medicine and Biomedical Sciences

Dr. Roberto Sanchez
Associate Professor
Department of Structural and Chemical Biology
Mount Sinai School of Medicine
Ph.D., The Rockefeller University

Dr. Wen-Yih Sun
Professor of Earth and Atmospheric SciencesPurdue University Director National Center for Typhoon and Flooding Research, Taiwan University Chair Professor Department of Atmospheric Sciences, National Central University, Chung-Li, TaiwanUniversity Chair Professor Institute of Environmental Engineering, National Chiao Tung University, Hsin-chu, Taiwan.Ph.D., MS The University of Chicago, Geophysical Sciences
BS National Taiwan University, Atmospheric Sciences
Associate Professor of Radiology

Dr. Michael R. Rudnick
M.D., FACP
Associate Professor of Medicine
Chief, Renal Electrolyte and Hypertension Division (PMC)
Penn Medicine, University of Pennsylvania
Presbyterian Medical Center, Philadelphia
Nephrology and Internal Medicine
Certified by the American Board of Internal Medicine

Dr. Bassey Benjamin Esu
B.Sc. Marketing; MBA Marketing; Ph.D Marketing
Lecturer, Department of Marketing, University of Calabar
Tourism Consultant, Cross River State Tourism Development Department
Co-ordinator , Sustainable Tourism Initiative, Calabar, Nigeria

Dr. Aziz M. Barbar, Ph.D.
IEEE Senior Member
Chairperson, Department of Computer Science
AUST - American University of Science & Technology
Alfred Naccash Avenue – Ashrafieh

President Editor (HON.)

Dr. George Perry, (Neuroscientist)
Dean and Professor, College of Sciences
Denham Harman Research Award (American Aging Association)
ISI Highly Cited Researcher, Iberoamerican Molecular Biology Organization
AAAS Fellow, Correspondent Member of Spanish Royal Academy of Sciences
University of Texas at San Antonio
Postdoctoral Fellow (Department of Cell Biology)
Baylor College of Medicine
Houston, Texas, United States

Chief Author (HON.)

Dr. R.K. Dixit
M.Sc., Ph.D., FICCT
Chief Author, India
Email: authorind@computerresearch.org

Dean & Editor-in-Chief (HON.)

Vivek Dubey(HON.)
MS (Industrial Engineering),
MS (Mechanical Engineering)
University of Wisconsin, FICCT
Editor-in-Chief, USA
editorusa@computerresearch.org

Sangita Dixit
M.Sc., FICCT
Dean & Chancellor (Asia Pacific)
deanind@computerresearch.org

Suyash Dixit
(B.E., Computer Science Engineering), FICCTT
President, Web Administration and
Development , CEO at IOSRD
COO at GAOR & OSS

Er. Suyog Dixit
(M. Tech), BE (HONS. in CSE), FICCT
SAP Certified Consultant
CEO at IOSRD, GAOR & OSS
Technical Dean, Global Journals Inc. (US)
Website: www.suyogdixit.com
Email:suyog@suyogdixit.com

Pritesh Rajvaidya
(MS) Computer Science Department
California State University
BE (Computer Science), FICCT
Technical Dean, USA
Email: pritesh@computerresearch.org

Luis Galárraga
J!Research Project Leader
Saarbrücken, Germany

Contents of the Issue

i. Copyright Notice
ii. Editorial Board Members
iii. Chief Author and Dean
iv. Contents of the Issue

1. A Theoretical Analysis of the Audit Committee's Role in China. *1-14*
2. The Stock Price Effect of the Affordable Care Act. *15-20*
3. An Analysis on the Impact of Participatory Budgeting and Procedural Fairness toward Manager's Commitment and Performance. *21-33*
4. Disclosure of Information in Audit Reports. *35-44*
5. The Impact of the Managerial Empowerment in the Performance of Investment Funds in the Jordanian Public Universities. *45-54*
6. Measures, Determinants and Commonality in Liquidity: Empirical Tests on Tunisian Stock Market. *55-65*
7. Factors Associated with Audit Reports in Saudi Arabia. *67-74*

v. Fellows and Auxiliary Memberships
vi. Process of Submission of Research Paper
vii. Preferred Author Guidelines
viii. Index

Global Journal of Management and Business Research: D
Accounting and Auditing
Volume 14 Issue 5 Version 1.0 Year 2014
Type: Double Blind Peer Reviewed International Research Journal
Publisher: Global Journals Inc. (USA)
Online ISSN: 2249-4588 & Print ISSN: 0975-5853

A Theoretical Analysis of the Audit Committee's Role in China

By Pao-Chen Lee

Kainan University, Taiwan

Abstract- This paper aims to analyze the role of the Audit Committee (AC) in China by employing the following theoretical frameworks: managerial hegemony theory to examine whether ACs in China serve as a mere "rubber stamp"; the origin of agency theory to determine whether ACs are supported by the separation of ownership and control to act as overseers and supervisors; and to use resource dependence theory to assess whether ACs provide added value by acting as consultants and trainers in China. Telephone interviews surveying 330 listed companies in China yielded 61 interviews, and the research results reveal that the AC's role supports both the resource dependency and agency theories but conflicts with managerial hegemony theory.

Keywords: role, audit committee, supervisory board, corporate governance.

GJMBR - D Classification : JEL Code : M42

ATHEORETICALANALYSISOFTHEAUDITCOMMITTEESROLEINCHINA

Strictly as per the compliance and regulations of:

© 2014. Pao-Chen Lee. This is a research/review paper, distributed under the terms of the Creative Commons Attribution-Noncommercial 3.0 Unported License http://creativecommons.org/licenses/by-nc/3.0/), permitting all non-commercial use, distribution, and reproduction in any medium, provided the original work is properly cited.

A Theoretical Analysis of the Audit Committee's Role in China

Pao-Chen Lee

Abstract- This paper aims to analyze the role of the Audit Committee (AC) in China by employing the following theoretical frameworks: managerial hegemony theory to examine whether ACs in China serve as a mere "rubber stamp"; the origin of agency theory to determine whether ACs are supported by the separation of ownership and control to act as overseers and supervisors; and to use resource dependence theory to assess whether ACs provide added value by acting as consultants and trainers in China. Telephone interviews surveying 330 listed companies in China yielded 61 interviews, and the research results reveal that the AC's role supports both the resource dependency and agency theories but conflicts with managerial hegemony theory.

Keywords: role, audit committee, supervisory board, corporate governance.

I. Introduction

The Sarbanes-Oxley Act (SOX, 2002) was enacted in the United States in response to a series of scandals around the turn of this century perpetrated by Enron and other companies. This act extends the responsibilities and status of the Audit Committee (AC). In 2002, China enacted its own form of Corporate Governance (CG). According to China's "Code of Corporate Governance for Listed Companies", ACs may be established alongside the existing monitoring system of the Supervisory Board (SB). Thus in China, establishing an AC is not legally mandatory but rather voluntary. The willingness to install an AC has increased from 1% (12) in 2000 to 99.86% (2106) in 2010 among listed companies in China (CCER, 2012). Alanezi and Albuloushi (2011) have advised all listed companies and policy makers to require the formation of ACs to increase the level of mandatory disclosure. Firth et al. (2007) noted that China's regulators have endeavored to improve accounting information, transparency, and corporate governance. The Chinese approach to supervisory CG structures in companies combines the AC found in the British and American governance models and the SB found in the German model. This dual-layered governance structure was created to suit China's unique economic, social and political environment.

The implementation of the singular governance structure of the AC on top of the bipolar structure of the SB with dual monitoring institutions in the internal supervisory mechanism in China is explored to highlight the role of the AC in China. This paper aims to explore whether ACs are supported by the separation of ownership and control to act as overseers, as predicted by agency theory. Fama and Jenson (1983) comment that the separation of ownership and control can be a result of efficient forms of economic organization. Agency theory implies a need for supervisory functions, as managers cannot be trusted to act in the interest of shareholders. This research uses shareholder agency theory as a foundation from which to understand the role of the AC as an overseer in China. Managerial hegemony theory is used to evaluate whether in China, the AC merely acts as a "rubber stamp"[1] The above question is answered based on data from surveys conducted through telephone interviews with 61 out of 330 listed companies. The respondent for this survey was the General Secretary of the Bod/SB, whose key function is to organize the BoD and the SB and who has access to confidential data from top management that is normally difficult to access. The general understanding of Chinese listed companies is revealed in the responses, which provide a clear conclusion to this study. The survey indicates that over 95 per cent of sampled companies' ACs can meet the definition of the role of AC as overseers and 92 per cent as supervisors through their actual practice, which supports agency theory. Further, 60 per cent of companies' ACs perform the role of consultants, thereby adding value to the company, and 23 per cent of companies' ACs act as trainers, thereby providing extra service to the company. While both of these roles support the resource. Managerial hegemony theory asserts that the Board of Directors (BoD) is a legal fiction and is dominated by professional management from the organization (Mace 1971; Vance 1983; Lorsch and MacIver 1989). The resource dependency theory suggests that the board serves as a strategic consultant to top managers rather than (or in addition to) exercising independent control (Carpenter and Westphal, 2001). It is hard to refute the expectation that ACs bring benefits to their organizations, for the AC is an invisible asset that may increase the enterprises' reputation, expertise, coordination and connection to earn more resources.

Author: Assistant Professor in the Department of Accounting, Kainan University, Taiwan. e-mail: paochen@mail.knu.edu.tw

[1] According to the Merriam-Webster collegiate dictionary, the definition of a *RUBBER STAMP is:* "a mostly powerless yet officially recognized body or person that approves or endorses programs and policies initiated usually by a single specified source."

© 2014 Global Journals Inc. (US)

This paper primarily explores the role that the AC plays in China. The AC is one of the sub-committees of the BoD. Resource dependency theory highlights that the board's role is to expand the outward-looking boundary to enhance a business. This theory will be applied to assess whether the ACs in China contribute added value or provide extra service to the company in addition to executing independent control.

The above question is answered based on data from surveys conducted through telephone interviews with 61 out of 330 listed companies. The respondent for this survey was the General Secretary of the Bod/SB, whose key function is to organize the BoD and the SB and who has access to confidential data from top management that is normally difficult to access. The general understanding of Chinese listed companies is revealed in the responses, which provide a clear conclusion to this study. The survey indicates that over 95 per cent of sampled companies' ACs can meet the definition of the role of AC as overseers and 92 per cent as supervisors through their actual practice, which supports agency theory. Further, 60 per cent of companies' ACs perform the role of consultants, thereby adding value to the company, and 23 per cent of companies' ACs act as trainers, thereby providing extra service to the company. While both of these roles support the resource dependence theory, 49 per cent of companies' ACs act as the decision maker through their involvement in developing important company policies, which appears to be in conflict with the independence of the AC's supervisory function. The findings reveal that the roles the ACs play in China is not merely a legal fiction.

The remainder of this paper is organized as follows: Section II introduces the background and purpose of this research. Section III is based on a study of related literature and regulations regarding the AC and CG to understand the AC's role functions and to raise questions. Section IV describes the theories and develops the hypotheses. Section V presents the empirical findings and analysis results, and Section VI concludes with an assessment of the findings.

II. Background and Purpose

The Corporate Governance (CG) supervisory mechanism in China is rather unique in that it simultaneously established the Audit Committee (ACs) of the board and the Supervisory Board (SB). Initially in 1993, China adopted two-tier boards, with SBs based on the German CG model. However, in 2002, China adopted ACs based on the Anglo-American CG model, thus combining the two models of CG supervisory mechanisms. Xiao et al. (2004) studied the role of the SB in China and found that a two-tier board is fraught with problems. Other studies also found that there is no evidence indicating that the SB can effectively monitor management. Su et al. (2005) found that neither board can perform an effective monitoring function. Liu and Sun's (2005) finding suggests that CG supervisory control mechanisms over management could be further enhanced, particularly through CG reform in China's transitional economy. Since 2002, China has allowed listed companies to choose whether or not to establish an Anglo-American AC system. This system still raises questions regarding the functional positions and responsibilities of the SB and the AC in China.

a) Functions of the SB and the AC in China

Article 126 in China's Corporate Law stipulates that the SB in a Chinese company serves as the internal supervisory unit responsible for supervising the directors' and managers' behavior. China's Corporate Law also defines the system for the SB and provides guidance on how to supervise the organization of internal power as exercised by the company's BoD and the layers of management on behalf of the shareholders. China's "Rules for Listed Companies Governance" establishes five main CG duties for the AC. The duties of the AC and the SB as stipulated in China's Corporate Law are very similar. The SBs oversee the BoDs on behalf of the stakeholders. The AC oversees management on behalf of the BoD and provides balance to the internal directors within the BoD. A comparison of the functions and responsibilities of the SB and the AC is provided in Table 1. From this comparison, it can be observed that there are two functional areas in which the two institutions overlap. First, both are internal supervisory units focusing on financial supervision. This overlap could result in confusion regarding corporate structure and even reduce the effectiveness of the supervision. Second, both are responsible for safeguarding against illegal behavior by directors and managers, such as serious improper transactions, which could trigger conflict in the operations of the two units. The SB and the AC are both supervisory institutions under different CG models. As the function of both institutions is essentially to provide oversight, adding the AC in addition to the SB into the internal supervisory mechanism may enable the AC to provide contributions in addition to its overseeing functions. Given the phenomena of functional overlap, it is therefore appropriate to first clarify the issue concerning *the role the AC plays in China.*

b) An Interactive Model of CG Structure

Cochran and Wartic (1988) asserted that CG solves specific problems by mandating types of interaction between senior executives, shareholders, the BoD and other relevant parties within a company. An interactive model demonstrating the interactions between the political institutions, product markets, capital markets, stakeholders, shareholders, firms, BoDs, SBs, ACs, internal auditors, external auditors,

© 2014 Global Journals Inc. (US)

managers and employees is shown in Figure 1: An Interactive Model of CG Structure. The shareholders, BoDs, SBs, ACs internal auditors, managers and employees comprise relationships within the company and interact within the CG structure. Many legal, economic, political, social and other forces are continually involved in these interactions. The interactive model in Figure 1 can help to better understand the impact of CG on the current internal supervisory mechanism and also help to explore possibilities for improving the level of understanding of CG in the future. In terms of its role , the position of the AC in the firm can be identified in Figure 1.

c) The Role of the Audit Committee in Corporate Governance

The World Bank (1993) reported that CG mechanisms consist of both internal and external mechanisms. The internal mechanisms primarily solve relationship and structural problems between stockholders, directors and managers, for example, the internal supervisory mechanism of the AC and the SB and the incentive mechanism of the remuneration committee. The external mechanism impacts and controls the behavior and performance of the company and is primarily comprised of the market and governance powers. Chang (2001) also acknowledges this division: the internal definition indicates the system arrangements relating to the company's functions, the BoD's structures, and the stockholders' powers; the external definition indicates an entire set of legal, cultural and system arrangements relating to the company's control rights and the residual demand rights for allocation. The OECD (1999) defines the structure of CG as involving a series of relationships between the company's managers, the BoD, stockholders and other stakeholders. The position of the stockholders within this series of relationships is defined in the "Principles of CG" issued by the OECD: one role for CG, corporate governance exists to protect the rights of stockholders; in another, the BoD takes responsibility for stockholders. The narrow definition of CG structure defines the shareholders as the target for protection; the broad definition of CG structure defines all stakeholders as this target. This paper aims to discover the role of the AC in the internal supervisory mechanisms for firms in China.

III. Literature and Questions

Corporate governance is the system through which business operations are directed. The corporate governance structure specifies the distribution of rights and responsibilities among different participants in the corporation, such as the board, managers, shareholders, and other stakeholders, and spells out the rules and procedures for making decisions on corporate affairs. Therefore, CG also provides the structure through which a company's objectives are set and articulates the means for attaining these objectives and for monitoring performance (Organization for Economic Cooperation and Development 1999; OECD 2004).

Corporate governance defines the procedures used to manage a company and thereby affects the managers in a company (Cohen et al. 2010; Acharya et al. 2011). Cohen et al. (2010) indicated that in many instances, ACs play a passive role in helping to resolve contentious financial reporting issues with management; the respondents indicated that the auditor and management often try to resolve issues before they come to the attention of the AC. The authors note that auditors indicate that management has a major influence over the hiring and termination decisions for external auditors. Acharya et al. (2011) found that corporate governance affects the power balance between managers and the firm and has important implications for the debate on executive pay. Specifically, while better governance may incentivize managers to perform better, it also reduces the firms' ability to attract the best managers. These two effects offset each other and may explain why it has so far proven difficult to find direct evidence that corporate governance increases firm performance. In summary, management has the power to influence firm decisions; an AC may play a passive role in helping management to make better decisions but does not involve itself in creating important company policies. Hence, the following question is raised:

Q1: In China, does the AC involve itself in developing important company policies?

The Blue Ribbon Committee (BRC) (1999: 22) noted that "several recent studies have produced a correlation between AC independence and two desirable outcomes: a higher degree of active oversight and a lower incidence of financial statement fraud." According to the studies by Beasley (1996), Abbott et al. (2004), Klein (2002a), Klein (2002b), Carcello and Neal (2003), Xie et al. (2003), and Bedard et al. (2004), the more independent the ACs are, the better they can exercise their supervisory functions and provide appropriate oversight. It is anticipated that the establishment of the AC will strengthen the oversight of management by the BoD. According to CSRC (2006), the implementation of an AC introduces oversight independently into the decision making process of the BoD rather than having the AC make decisions itself.

It appears that there is no universally accepted definition of an AC to be found in regulations, reports, surveys and research studies. Instead, different definitions are presented such as those in Section 404 of SOX (2002), Klein (2002), Collier (1996), and Braiotta (1981). These definitions state that the AC is a sub-committee of the BoD, and they confine the definition primarily to the composition and the key responsibilities of ACs:

© 2014 Global Journals Inc. (US)

"The term "AC" means – a committee (or equivalent body) established by and amongst the BoD of an issuer for the purpose of overseeing the accounting and financial reporting processes of the issuer and audits of the financial statements of the issuer" (US Securities Exchange Act of 1934 #3 (a)(58); SOX Section 404, 2002)

These definitions emphasize the composition of the AC through the participation of independent directors with the professional abilities to perform the key responsibilities of financial reporting, audit and internal control. In summary, all definitions of the AC tend to emphasize its responsibility or operations: its primary tasks are to review financial statements, the effectiveness of the company's accounting and internal control system, and the findings of the auditors and to make recommendations on the appointment and remuneration of the external auditor. An AC is set up to oversee, review and monitor the financial reporting process and the audit activities.

The research on the responsibilities of the AC is listed in Table 2: Documentary Source on the Responsibilities of the AC in the American, British and Chinese models. Despite the variations in the specifications for the functions of the AC in the Anglo-American and Chinese models, their common aim of supporting the management targets of the BoD and providing an independent evaluation of operations are upheld. According to the definition of the above regulations and literature, the key function of the AC is to act as an overseer.

An AC is a committee established by the board of directors to oversee the accounting and financial reporting processes of the company and to audit its financial statements (US Securities Exchange Act of 1934 Section 3 (a) (58); SOX Section 404, 2002). The AC's function is to monitor the board of directors to ensure that it operates well. There are various issues associated with ACs, the first being AC effects (He et al. 2009; Chien et al. 2010; Carcello et al. 2011; Ika et al. 2012). Chien et al. (2010) examined AC effects in the largest public hospitals in the US. The authors found that the presence of a committee and the committee's specific qualities of independence, financial expertise, and increased activity positively correlate with a reduced frequency of internal control problems. Ika et al. (2012) indicated that the timeliness of reporting is associated with AC effectiveness. This result suggested that AC effects are likely to reduce financial reporting lead times. In summary, an AC is effective and also improves the financial reporting quality of a company. The AC acts as an overseer to monitor and audit the company's major financial information disclosure. Thus, the following question is raised:

Q2: In China, does the AC monitor and audit the company's major information disclosure as an overseer[2]?

Another area of discussion is the relationship between the AC and earnings management (Carcello et al. 2006; Rahman et al. 2006; Ghosh et al. 2010; Chandrasegaram et al. 2013). Carcello et al. (2006) found that alternate corporate governance mechanisms are an effective substitute for AC financial expertise in constraining earnings management. Ghosh et al. (2010) examined whether board characteristics (composition, size, and structure) and AC characteristics (composition, size, activity, expertise, ownership, and tenure) were associated with earnings management before and after the promulgation of the SOX Act. The authors found that boards and ACs were unsuccessful in constraining corporate earnings management during the post-SOX Act period. The role of the AC is to supervise matters related to transactions, which raises the following question:

Q3: In China, does the AC supervise matters related to transactions?

In practice, it can be observed that the internal governance of a firm may not be as strong as the formal structures suggest. This weakness may impact the quality of the accounting information. The effects must be discussed in the context of three issues: independence, expertise, and diligence. First, there is a relationship between independence and the effects of the AC (Zhang, Y et al. 2007; He et al. 2009; Al-Najjar 2011; Cohen et al. 2011; Sarkar and Sarkar 2012). Al-Najjar (2011) found that ACs are more independent when firms have large boards and more insider ownership. These findings indicate that corporate governance could be considered an effective internal tool to achieve greater audit independence. Sarkar and Sarkar (2012) examined AC independence in India. They determined that strengthening auditor independence and enhancing the powers, functions, and independence of the AC will be crucial for the governance of Indian companies. A highly perceived "independence quotient" for a company's auditing process can be reassuring to outside shareholders, helping to reduce the risk premium when raising capital and thereby providing a strong business case for strengthening auditor and AC independence. In summary, independence is an important factor influencing the effects of an AC. Corporate governance could be more effective if the AC is more independent. The independence of the AC is viewed as the key to oversight and supervisory characteristics.

One issue with ACs is their characteristics (Goodwin et al. 2006; Barua et al. 2010; Li and Richard

[2] According to Merriam-Webster's collegiate dictionary, the definition of *OVERSEER* is : "a person who watches and directs the work of other people to be sure that a job is done correctly".

© 2014 Global Journals Inc. (US)

2012; Iyer et al. 2013). Goodwin et al. (2006) examined whether the existence of an AC, AC characteristics, and the use of internal audits are associated with higher external audit fees. The authors found that the existence of an AC, more frequent committee meetings, and increased use of internal audits are related to higher audit fees. These findings are consistent with an increased demand for higher quality auditing by ACs and by firms that make greater use of internal audits. In addition, Barua et al. (2010) indicated that the internal audit budget is positively related to the number of AC meetings. Iyer et al. (2013) examined the characteristics of AC financial experts. The authors found that professional accounting certification and AC experience are valued positively by the board of directors when designating an AC member as a financial expert. Otherwise, as Barua et al. (2010) have indicated, the internal audit budget is negatively related to the presence of an auditing expert on the committee and the average tenure of AC members. In summary, these examples show that the AC can provide added value to the company, which raises the following question:

Q4: In China, does the AC provide added value to the company?

There is a relationship between expertise and the effects of an AC (Zhang et al. 2007; Krishnan and Visvanathan 2008; Krishnan and Lee 2009). Zhang et al. (2007) found that firms are more likely to be identified with an internal control weakness if their ACs have less financial expertise or, more specifically, have less accounting and non-accounting financial expertise. Krishnan and Visvanathan (2008) found that the AC's financial experts can effectively perform their monitoring function and promote conservative accounting only when they are on boards that are characterized by strong governance. Their findings were consistent with the notion that accounting expertise contributes to improved monitoring by the members of the AC, which in turn enhances multiple attributes of financial reporting quality. In summary, expertise is an important factor influencing the ability of an AC to provide added value to the company.

There is a relationship between diligence and the effects of an AC (Raghunandan and Rama 2007; Stewart and Munro 2007; Sharma and Lee 2009; Yin et al. 2012). Raghunandan and Rama (2007) note that prior researchers found that the number of AC meetings is associated with many "good" outcomes related to financial reporting. The authors found that AC meetings are more frequent for firms that are larger, have greater levels of outsider block-holdings, or are in industries prone to securities litigation. Stewart and Munro (2007) found that the frequency of committee meetings and the auditor's attendance at such meetings are significantly associated with a reduction in perceived audit risk. In summary, diligence is an important factor influencing the effects of the AC's role in providing extra services to the company. The following question is raised:

Q5: In China, does the AC provide extra services to the company?

IV. Theory and Hypothesis

The theories related to the AC within the CG of the company can benefit every party concerned. Because the theory is applied with a certain purpose in certain conditions, it is not an all- powerful theory and cannot be applied in every condition, nor can it be worked out in every environment (Wang, 2005). Moreover, because the theory is developed in certain conditions by a human being, it has its limitations. Nevertheless, the theory can have a critical influence when there are problems to be solved. In addition to Agency Theory, Managerial Hegemony Theory and Resource Dependency Theory are also studied and analyzed as related to the role of AC.

a) Agency Theory

Jensen and Meckling (1976) refer to the moral hazards arising from conflicts of interest in the relationship between owners and managers: a basic assumption underlying agency theory is that managers are inclined to act opportunistically to further their own interests before shareholders' interests and that there are agency costs associated with keeping the managers' interests aligned with those of the owners. Fama and Jensen (1983) further noted that CG research should focus on agency problems and on how to reduce agents' costs. Shleifer and Veshny (1997), however, stated that the problem lies in that most future contingencies are too hard to describe and foresee, and as a result, complete contracts are technically unfeasible. Meanwhile, a basic conclusion of agency theory is that the value of a firm cannot be maximized because managers possess discretions that allow them to expropriate value to themselves. These authors therefore emphasized that CG should be established to safeguard financial capital from investors and lenders and to protect the returns on investment from that capital. In other words, these authors maintained that the core task of CG is to ensure the capital suppliers' interests. The shareholder model as applied in the UK and the US shows that when shareholder wealth is maximized, social wealth will be maximized as well.

The agency theory suggests that when the executives of enterprises are also the owners, they have the right to ask for the enterprise's entire surplus and are therefore motivated to work hard. When the executives of enterprises are not the owners, it can give rise to proxy shareholder problems. The harder the agent works, the higher the agent's fee. The larger the income of the enterprise, the more profits the owner will make, wherein the agent may become discontent, causing an inevitable conflict of interest. The shareholder's proxy

© 2014 Global Journals Inc. (US)

theory suggests that because the agent has more information than the shareholder does, there is an information asymmetry that may affect the shareholder's rights. The relationships between the agent, the shareholders and the executives can be defined as a contract and, because of the incompleteness of the contract, problems under agency theory are unavoidable. Vafeas and Theodorou (1998) indicated that because managers are under pressure to produce immediate results, they tend to ignore investments that could have long payback periods. Shareholder's proxy theory noted the following four basic problems (Jensen and Meckling, 1976):

1. Because executives pursue their own interests, there is no reason or evidence indicating that they are unselfish or that they are naturally willing to maintain unanimity with the shareholder's interests.
2. There may be information asymmetry – no one can have complete information because information is distributed among individuals, but it is likely that those inside the company (such as the BoD) will gain access to more information than those outside (such as shareholders).
3. The risk of moral problems and reverse choice may exist. It is assumed that because agents are prone to opportunism, the agent post will be neglected in the course of acting for, incurring damage to and encroaching on the shareholders' interests.
4. Because the market environment is full of uncertainty, it is difficult to judge whether the agent's behavior indicates his hard work.

Shareholder proxy problems not only exist between shareholders and managers but also between minority and large shareholders, also known as 'control shareholders' (Shleifer and Vishny, 1997). Normally, minority shareholders lack a strong interest in participating in shareholder meetings. Therefore, a problem may arise as to who is going to control supervision with respect to shareholders and managers, which explains why it is more difficult to protect the interests of shareholders. Control by the larger shareholders might deprive minority shareholders of their utilities in much the same way that managers might deprive shareholders of their utilities. These two types of agency problems are often interlinked. The mechanism of CG must therefore be designed to solve these two types of agency problems and to determine which mechanism can act as a security measure to protect minority shareholders from being taken advantage of by larger ones. In other words, the CG mechanism is mandated to protect the external body of shareholders from encroachment by internal management and controlling shareholders.

Because the interests of shareholders and managers are usually inconsistent, the CG mechanism is also designed to alleviate the proxy problems between them. The essence of CG is to protect shareholder's interests from being infringed upon, and at its core is a set of rules and systems to provide protection for shareholders and to guarantee that shareholders receive fair repayment from their investment. The supervisory mechanism of CG provides checks and balances on the managers on behalf of owners. Shareholder's proxy theory is particularly focused on the internal supervisory mechanism within the company, with a view to analyzing the internal structure and the internal relationships within the enterprise, which are not controlled by market strength. In essence, the internal supervisory mechanism is a type of internal agreement, in that shareholders hold the decision-making power to change the management team's membership or the corporate structure and to potentially disband the company. The aim is to design a good mechanism using the power of checks and balances to maximize the company's value.

Modern enterprises regard combining internal management levels as the foundation for expanding business on a large scale, and therefore they consider the division of the rights of control between ownership and management to be essential. The difficulty lies in balancing the ownership rights between owners (shareholders) and managers; if any imbalance in interests and information inconsistency is not managed through an effective CG mechanism, problems will further escalate to involve potential agency problems. Eisenhardt (1989) assumes that because managers are opportunistic, intent on gaining self satisfaction instead of maximizing profit on behalf of the principal, there is potential conflict of interest in terms of risk sharing between the enterprises and agents. Furthermore, she argues that agency theory has clear implications for the monitoring and control role of the BoD, whereas implications regarding the BoD's strategic role are not definite. Zahra and Peace (1989) highlighted the importance of the BoD's role in establishing guidelines for being implemented and effective control. Fama (1983) stated that the BoD should be viewed as the ultimate internal monitor of the set of contracts called a firm. Hill (1995) concluded that agency theory does have implications for the strategic role of the BoD in terms of corporate control. McNulty and Pettigrew (1999, page 50) noted, "little has been said by agency theorists about strategy as a means of control over managers."

It is generally acknowledged that the British and the American CG models fall under the category of the shareholders' model (Wang 2005). China adopted the form of AC found in the British and American CG systems. The question has arisen as to whether the ACs in China can act as overseers and supervisors to strengthen internal supervisory mechanisms and thereby safeguard the interests of all shareholders, particularly small shareholders as indicated in Q2-3. It is hypothesized that the role that the ACs play in China as overseers and supervisors lends support to Agency

© 2014 Global Journals Inc. (US)

Theory. On the contrary, the Q1 role as decision makers runs counter to this theory.

b) Resource Dependency Theory

Pettigrew (1992) argued that both sociology and management doctrines are employed to form resource dependency theory. This theory is based on the concept of cooptation, focusing in particular on the attempts by BoDs to create appropriate linkages with the external environment to expand the enterprise. Pfeffer and Salancik (1978) added that when an organization appoints an individual to its board, it expects that as a board member, the individual will come to support the organization, will concern himself with its problems, will favorably present it to others, and will try to aid it. The BoD is the key cooperative mechanism through which the organization links to the external environment to access important resources and to buffer itself against adverse environmental change (Pfeffer and Salancik (1978), Pearce and Zahra (1991), Goodstein, Gautam et al. (1994)).

Ingley and Van der Walt (2001) defined a "resource" as the connection to a nation's elite, industrial intelligence and competitors, market or capital. Further, inter-organizational linkages such as the appointment of outside directors can also be used to manage environmental contingencies (Muth and Donaldson 1998). Price (1963) and Zald (1967) asserted that the board is viewed as a helper to the organization by influencing other constituencies on behalf of the focal organization. The professions and communities of the directors can provide resources within organizations. Overall, resource linkages by means of the board are aimed at maximizing its performance (Zald 1969; Pfeffer 1972; Pfeffer and Salancik 1978).

From such linkages, the following four types of organizational benefits are defined by Bazerman and Schoorman (1983):

a) Building reputation – Useem (1984) asserted that the BoD can affect the organization's reputation and demonstrate that the organization is linked to external organizations.
b) Access to expertise– Mizruchi and Stearns (1988) and Stearns and Mizruchi (1993) concluded that directors are likely to possess skills that could be beneficial to the focal organization in terms of financial, technological or prior work experience with competitors. The background of external directors is expected to support resource dependence theory (Van der Walt and Ingley 2003).
c) Horizontal coordination – a level of environmental awareness not readily available to management can be achieved by exchanging information on topics of concern and providing opportunities for communication among directors and management (Bazerman and Schoorman (1983).
d) Vertical coordination – to reduce uncertainty about the availability of resources and perhaps even to secure favorable treatment for the organization, vertical linkages to suppliers are vitally beneficial to the organization (Bazerman and Schoorman (1983).

Criticisms have been raised about resource dependence theory, for example, the theory focuses on the role of boards in potentially obtaining resources and ignores how they could be involved in exploiting resources (Finkelstein and Hambrick 1996; Hung 1998). Therefore, it is suggested that the board serves as a strategic consultant to top managers rather than (or in addition to) exercising independent control (Carpenter and Westphal 2001). Overall, the shortcomings of resource dependence theory center upon several board activities: providing advice (Lorsch and MacIver 1989; Westphal 1999); monitoring (Fama 1980; Bainbridge 1993; Johnson *et al.*, 1996); and strategizing (Lorsch and MacIver 1989; Kesner and Johnson 1990) It is hard to refute the expectation that the members of ACs will bring benefits to their organizations, for the AC is an invisible asset that could improve the enterprises' reputation, expertise, coordination and connection, allowing it to earn more resources. The AC is one of the sub-committees under the BoD. Resource dependency theory emphasizes that the role of the board expands the outward-looking boundary to enhance a business. It may therefore be asked whether the AC's contribution in China brings added value or provides extra service to the company, as indicated in Q4-5, in addition to executing its independent control. It is hypothesized that the role the AC plays in China, as indicated in Q4-5, lends support to the Resource Dependency Theory.

c) Managerial Hegemony Theory

Managerial hegemony theory primarily asserts that the BoD is a legal fiction and is dominated by professional management in the organization (Mace 1971; Vance 1983; Lorsch and MacIver 1989). Drucker (1974) asserted that the BoD is an important ceremonial and legal fiction. Most boards only perform effectively during a period of crisis (Mace 1971; Clendenin 1972). Hung (1998) added that the governing board of a company serves primarily as a "rubber stamp". Whisler (1984) and Lorsch and MacIver (1989) stated that directors are constrained from setting strategies, although they would often like to become involved. Ingley and van der Walt (2001) proved that, in practice, boards are not involved in establishing strategies. It may that boards lack, in relative terms at least, the required knowledge of the organization (Hung 1998).

Some points explaining managerial hegemony theory are described as follows:

1. Given the assumption of the separation of ownership and control (Berle and Means 1932; Jensen and Meckling 1976), a state of diffuse

© 2014 Global Journals Inc. (US)

ownership could perhaps lead to relative weakness in shareholder control, thereby giving management a relatively stronger foothold over the board's control of the company.

2. Given the nature of information asymmetry between non-executive directors and management, management clearly holds an advantage in terms of in-house information. A board principally composed of non-executive directors would be deemed more passive regarding the activities and information within the company than management.
3. Internal directors rely on the chief executive officer (CEO) for compensation and career advancement and invariably report to him in practice. Under this circumstance, it is unavoidable that internal directors support the CEO at board level, which reduces the effectiveness of the BoD by shifting the balance of power against external directors. Moreover, management may escalate its influence to control the board.
4. Managers can also use retained earnings to determine financial investment independently (Mizruchi 1983; Byrd Parrino *et al.* 1998), allowing them to reduce board control.
5. In most instances, management handpicks board members (Pfeffer 1972); therefore, the board directors are deemed to be in the control of management by virtue of the selection process.

Similarly, Herman (1981) also said that the board only plays a superficial review and approval role, similar to a "rubber stamp" function. Some studies have refuted the managerial hegemony theory. For instance, Zeitlin (1974) argued that the growth of ownership by large shareholders and interlocking directorships considerably reduced the ability of management to control boards. Mizruchi (1983) argued strongly that the board has ultimate control over management through their designated right to hire or fire the CEO. Therefore, Stiles and Taylor (2001) concluded that empirical support for hegemony theory has its limitations, emphasizing its dependence on the definition of the term "control".

It is hypothesized that the role the AC plays in China is not consistent with Managerial Hegemony Theory. The five questions raised above were all designed to prove this hypothesis.

V. Design and Method

a) *Questionnaire Design*

Survey research by telephone can be defined in this case as personal face-to-face interviews arranged in advance by telephone (Frey, 1989). This research adopts the telephone survey method because it facilitates the collection of quality data in an efficient and timely manner. Lavrakas (1993) describes telephone surveys as most closely approaching the level of unbiased standardization that is the goal of all good surveys. The survey questionnaire should be designed as a call sheet in advance. This survey is aimed to explore Q1-5, and Appendix A: Call Sheet – Survey by Telephone Interview is designed accordingly. Following up on the developed questions, the five functional roles being explored for the AC are therefore called the Decision Maker, Overseer, Supervisor[3] , Consultant and Trainer.

Skillful interviewing is important because a sudden anxiety may surface during the conversation, resulting in the respondent hanging up the telephone (Frey, 1989). Therefore, an initial feeling of trust on the part of the respondent can motivate him or her to answer confidential questions without hesitation. Establishing this trust is critical to avert higher refusal rates and to obtain accurate information. However, because of the limitation on the complexity and length of the questions raised in a telephone interview, questionnaires should be designed to be no longer than 30 minutes to avoid respondent fatigue (Lavrakas, 1993). Fully structured questions were designed for the telephone interview to gain a sufficient understanding of the role the AC plays in China (Appendix A).

b) *Sampling*

Sampling was via random selection from over 50% of the listed companies with ACs in China. The sample frame consists of 635 companies; from among these, 330 companies were contacted in 2009. The respondent in a sampling unit was identified as the General Secretary of the BoD, whose key function is to organize the BoD/SB, including the AC's business, and the coordinator of the ACs/SBs for the related institutions. Telephone numbers for the sample frame were retrieved from the records on the information website for Chinese listed companies. For a total of 330 of the 635 listed companies, the General Secretary of the BoD was contacted, and over 61 responded to every survey question. The remaining 269 of the 330 listed companies rejected the survey. The major reason for rejecting the survey could be assumed to revolve around the probability of leaking confidential information. Some companies suspected that the interviewer could be a potential investor seeking to obtain first-hand information about their supervisory performance, while others went as far as suspecting the interviewer to be an undercover agent from the Security Exchange Commission or another related Chinese government agency. A total of 305 out of 635

[3] According to Merriam-Webster's collegiate dictionary, the definition of *SUPERVISOR* is : "a person who supervises someone or something. Supervise: to be in charge of (someone or something) **or** to watch and direct (someone or something)."
According to Merriam-Webster's collegiate dictionary, the definition of "*SUPERVISOR*": "not only covers "*OVERSEER*", to watch and direct, but also means to be in charge of someone or something.

© 2014 Global Journals Inc. (US)

companies were called, but no one at the level of the General Secretary of BoD could be contacted. Various types of excuses were made to avoid the telephone interview: for example, no one answered the phone call; the wrong telephone number was used, or the General Secretary of the BoD was either not in the office or too busy to answer the call. Nevertheless, these 305 listed companies may be considered as having the potential to cooperate and to respond to related questions in similar research in the future.

Despite several challenges, in this research, telephone surveys with 635 companies were smoothly conducted, 330 companies received the phone call and 61 (5%) of these were willing to respond to the survey questions. The samples are categorized according to the Shanghai Stock Exchange and CCER database; the CSRC definition is described; and the sample industries in this research are shown on Table 3: Industry Statistics, Share type and Listed Year of Research Samples.

The summary of the respondent's background, company information and the industry classification is listed. A total of 61 listed companies accepted the telephone interview; though the response rate is only 5% (61/330), given the high level of the information, a refusal to respond could be assumed to revolve around the probability of leaking confidential information. Meanwhile, confidential data and top management are both difficult to access. The respondents' are all confirmed as holding the position of the General Secretary of the BoD/SB. The respondents must be reported and recognized by the SSE in China at a high management level, which is normally equal to a VP or manager, depending on the individual company's definition. The listed year for the sample firms is between 1990 to 2004, so these companies have conducted supervisory functions for at least 5 years. In terms of share type, 61 firms have A shares and 7 firms have A+B share. The research samples cover almost every categorization of industry except Z: No Associated. In this research, the manufacturing industry occupies 50% of the sample companies, reflecting the industry allocation in China.

c) Contacting Procedure

The procedures for contacting respondents are outlined in the following six steps:

First step: send emails featuring the biography of the interviewer and emphasizing the sincere desire to have a positive mutual interaction with the responding company and to share experience and exchange knowledge regarding the subject matter.

Second step: send out fully structured questionnaires by email to achieve the following two objectives: 1) obtain a voluntary response by email and 2) introduce the interviewer to gain the respondent's trust and confidence and to inform them in advance that the interviewer would call over the subsequent days. This information allows the respondents ample time to prepare answers to the survey should they be willing to respond.

Third step: call the companies that received advance emails. An average number of sampled companies was called each day so that every batch of sampled companies was called within the target day.

Fourth step: complete follow-up calls if the respondents were not contacted; the calling procedure is repeated as in the original call.

Fifth step: a call sheet (Appendix A) with a questionnaire for each number was prepared for use by the interviewer as the working paper for this research. The interview was solely executed by the author with the interview wording standardized principally as the call sheet. The working papers were collected to calculate the statistical number for each question as evidence of this research once the sample calls were completed.

Sixth step: the telephone interview was conducted in Chinese. Accurate translation was checked by four levels of review: first by a peer review in Chinese and English, second by the supervisor in English, third by the panel team in English, and a final review by internal and external examiners in English.

VI. Result and Analysis

From the responses, the statistics on the roles that the AC plays in China were calculated and analyzed as indicated in Table 4. The analytical steps proceeded as follows:

First, based on the literature, the possible roles that the AC could play under the CG system in China are identified and questions are summarized (A); the next step is to analyze the characteristics of the AC that may impact its role (B); the third step, based on the literature, is to define the relationship between the AC's role and its characteristics (C); step four applies the three previously mentioned theories as the basis of an analysis to examine the designed questions: the role that the AC plays in China (D-E); the final step is based on the previous four steps and analyzes whether the results support or conflict with the theories (F-G).

The results from these analytical steps are summarized as follows:

1. A total of 95% of ACs in China act as an overseer by monitoring and auditing the company's major information disclosure; this role supports Agency Theory but is not in congruence with Managerial Hegemony Theory (Table 4: G2).
2. A total of 92% of ACs in China supervise matters related to transactions by providing professional opinions on related transactions, which is the extended function of ACs included in the broad

© 2014 Global Journals Inc. (US)

definition of this role. This finding supports Agency Theory but runs counter to Managerial Hegemony Theory (Table 4: G3).

3. A total of 60% of ACs in China act as consultants to provide added value to the company by diagnosing and providing solutions to any problems facing the company during its development stage. This role supports Resource Dependency Theory but conflicts with Managerial Hegemony Theory (Table 4: G4).
4. A total of 49% of ACs in China act as decision makers by involving themselves in developing important company policies, which appears to be in conflict with the independent supervisory function of the AC. This role is in conflict with both Agency Theory and Managerial Hegemony Theory (Table 4: G1).
5. A total of 23% of ACs in China act as trainers and provide extra service to the company by providing professional training to the middle and senior level management of the company. This role supports Resource Dependency Theory but contradicts Managerial Hegemony Theory (Table 4: G5).

VII. Conclusion

To implement an AC under the dual layer governance structure existing in China impacts the original practice and diverges from its internationally recognized role. The AC in China remains at a rudimentary and experimental stage, experiencing a process of innovation as well as trial and error. Therefore, the AC in every company in China still appears to be in the process of exploring practices suitable to its unique CG setting and model. These findings are considered from the perspectives of the applied theories to reveal the degree of the AC's contribution in China, rather than providing a mere judgement of "good" or "poor" implementation of supervisory functions. The results support Agency Theory in that ACs in China play the role of a financial overseer (95%) and provide professional opinions on transactions in a supervisory role (92%). However, the findings run counter to the independence of overseers as decision makers (49%); they also run counter to the theory of Managerial Hegemony because they prove that the AC is not just a legal fiction in China, as some have alleged. Meanwhile, the AC in China is not limited to exercising independent control.

The AC provides added value and extra services, acting as a trainer (23%) and a consultant (60%) in addition to independent control of overseers and supervisors in the actual creation and disclosure of financial statements, which support the theory of Resource Dependency.

Different CG theories tend to have their specific value, but every theory also has its inherent limitations. Thus, it stands to reason that at a particular time period and under certain conditions, a country might need a particular CG theory to suit its needs. Perhaps this reasoning was why Stiles and Taylor (2001) noted that no single perspective adequately explains this strategic role, though the managerial, the agency and the resource dependence theories provide insight. These authors therefore summarized the view that one theory alone does not illuminate the entire spectrum of board endeavors, which receives strong support from an examination of these theory's shortcomings. It is not simply a matter of selecting between agency theory, managerial hegemony theory or resource dependence theory. Rather, each theory has a unique contribution to make to promote our better understanding regarding the corporate governance debate (Kiel and Nicholson, 2003).

In summary, the findings based on agency theory, managerial hegemony theory and resource dependence theory as reported in this paper and other related comments on the interpretation of those findings and suggestions based upon them are useful as a reference for users such as regulators, supervisors or Boards of Directors when considering what role ACs should play in companies in China. The findings in this research can also be effective for improving the supervisory functions and for avoiding redundancies and gaps in internal supervision with a view to proposing how managers and owners can improve interaction and coordination with SBs in China. Finally, the investigation and the results reported in this paper may offer a basis for continuing research on the effectiveness, operation and coordination of supervisory governance after the introduction of an AC, as well as for studies of other monitoring functions such as audit and internal control.

References

1. Abbot, L. J., Parker, S. & Peters, G. F. (2004). Audit Committee Characteristics and Restatements, Auditing: A Journal of Practice and Theory 23(1): 69-87.
2. Acharya, V. V., M. Gabarro, & Volpin P. F.. (2011). Competition for managers, corporate governance and incentive compensation. Corporate Governance and Incentive Compensation (March 16, 2010). AFA.
3. Alanezi, F. S., & Albuloushi, S. S. (2011). Does the existence of voluntary audit committees really affect IFRS-required disclosure? The Kuwaiti evidence. International Journal of Disclosure and Governance 8(2):148-173.
4. Al - Najjar, B. (2011). The determinants of audit committee independence and activity: evidence from the UK. International Journal of Auditing 15(2): 191–203.

© 2014 Global Journals Inc. (US)

5. Bainbridge, S.M. (1993). 'Independent Directors and the ALO Corporate Governance Project', George Washington Law Review 61: 1034-1083.
6. Barua, A., D. V. Rama, & Sharma V. (2010). Audit committee characteristics and investment in internal auditing. Journal of accounting and public policy 29(5): 503–513.
7. Bazerman, M.and Schoorman F. D. (1983). A Limited Rationality Model of Interlocking Directorates, Academy of Management Review 8(2): 206-217.
8. Beasley, M.S. (1996). An empirical analysis of the relation between the board of director composition and financial statement fraud, The Accounting Review 71(4): 443-465.
9. Bédard, J., Chtourou, S.M.and Courteau, L. (2004). The Effect of Audit Committee Expertise, Independence, and Activity on Aggressive Earnings Management, Auditing: A Journal of Practice and Theory 23(2): 13-35.
10. Berle, A. and Means, G. (1932). The Modern Corporation and Private Property, New York, NY: World Inc.
11. Braiotta, L. J. (1999). The Audit Committee Handbook, 4th ed., New York: Wiley.
12. BRC (1999). Blue Ribbon Committee on Improving the Effectiveness of Corporate Audit Committees: Report and Recommendations, Blue Ribbon Committee, New York, NY: New York Stock Exchange and the National Association of Securities Dealers. http://www.nasdaq.com/about/Blue_Ribbon_Panel.pdf
13. Cadbury, A. et al. (1992). Financial Aspects of Corporate Governance, ("The Cadbury Report"). London, UK: The Committee on the Financial Aspect of Corporate Governance ("The Cadbury Committee"). and Gee and Co, Ltd. http://www.ecgi.org/codes/documents/cadbury.pdf
14. Carcello, J. V., T. L. Neal, *Z. V. Palmrose, & Scholz S.* (2011). CEO Involvement in Selecting Board Members, Audit Committee Effectiveness, and Restatements*. Contemporary Accounting Research 28(2): 396–430.
15. *Carcello*, J. V.and *Neal T. L. (2003).* Audit Committee characteristics and auditor dismissals following "new" going-concern reports, The Accounting Review 78(1): 95-117.
16. Carpenter, M.A. and Westphal, J. D. (2001). The Strategic Context of External Network Ties: Examining the Impact of Director Appointments on Board Involvement in Strategic Decision Making, Academy of Management Journal 44(4): 639.
17. CCER (n.d.). Chinese Center of Economic Research. [online] Available at: http://www.sinofin.net
18. Chandrasegaram, R., M. R. Rahimansa, S. K. A. Rahman, S. Abdullah , & Mat N. N. (2013). Impact of Audit Committee Characteristics on Earnings Management in Malaysian Public Listed Companies. International Journal of Finance and Accounting 2(2): 114–119.
19. Chang S. L. (2001). Exploration the system of establishing Audit Committee for the Chinese listing corporations (我國公司成立審計委員會動機的實證研究) Modern Finance and Economics(現代財經)142: 21(12).
20. Clendenin, W. D. (1972). 'Company Presidents Look at the Board of Directors', California Management Review 16(3):60-66.
21. Cochran P. L. and Wartic, S. L. (1988). Corporate Governance: A Review of Literature (公司治理——文献回顾（1988).), International Corporate Governance, Prentice Hall, USA: Financial Executives Research Foundation, transfer from 'What is Corporate Governance (什么是公司治理？).', Shanghai Economic Research (上海经济研究). 1996 (5).
22. Cohen, J. R., L. M. Gaynor, G. Krishnamoorthy, & Wright A. M. 2011. The impact on auditor judgments of CEO influence on audit committee independence. Auditing: A Journal of Practice & Theory 30(4): 129–147.
23. Cohen, J., G. Krishnamoorthy, & Wright A. (2010). Corporate Governance in the Post - Sar banes - Oxley Era: Auditors' Experiences*. Contemporary Accounting Research 27(3): 751–786.
24. Collier, P. (1996). The Rise of the Audit Committee in UK Quoted Companies: A Curious Phenomenon? Accounting, Business and Financial History 6(2): 121-140.
25. COSO (1987). The Report of the National Commission on Fraudulent Financial Reporting, ("The Treadway Report"), USA: The Committee of Sponsoring Organizations (COSO).
26. CSRC (2006). Guidelines for the Articles of Association of Listed Companies (as amended in 2006). 上市公司章程指引(2006年修订)., tr. By Julian朱暮, Beijing, China: China Security Regulatory Commission 中国证券监督管理委员会(CSRC). http://www.transipo.com/show.asp?id=325 (accessed 22July 2006).
27. Drucker, P. F. (1974). 'Management: Tasks Responsibility Practice', New York, NY: Harper and Row Eisenhardt, K. (1989). 'Agency Theory: An Assessment and Review', Academy of Management Review 14(1): 57-74.
28. Fama, E. F. & Jenson, M. C. (1983b). Agency Problem and Residual Claims, Journal of Law and Economics 26: 327-352.
29. Fama, E. F. (1980). Agency Problems and the Theory of the Firm, Journal of Political Economy 88: 288-307.

© 2014 Global Journals Inc. (US)

30. Fama, E. F., & Jenson, M. C. (1983a). Separation of Ownership and Control, Journal of Law and Economics 26: 301-326.
31. Finkelstein, S. and Hambrick, D. C. (1996). Strategic Leadership: Top Executives and their Effects on Organizations, Minneapolis/St Paul, MN: West Publishing Co.
32. Firth M., P. Fung, M. Y., & Rui, O. M. (2007). Ownership, two-tier board structure, and the informativeness of earnings-Evidence from China. Journal of Accounting and Pulbic Policy 26(4):463-496.
33. FRC. (2010). The UK Corporate Governance Code, London, UK: Financial Reporting Council (FRC). [online] Available at: http://www.frc.org.uk/documents/pagemanager/Corporate_Governance/UK%20Corp%20Gov%20Code%20June%202010.pdf(accessed 15 August 2010).
34. Frey, J. H. (1989). Survey Research by Telephone, 2nd ed., Newbury Park, CA and London: Sage.
35. Ghosh, A., A. Marra, & Moon D. (2010). Corporate Boards, Audit Committees, and Earnings Management: Pre - and Post - SOX Evidence. Journal of Business Finance & Accounting 37(9 - 10): 1145–1176.
36. Goodstein, J. et al. (1994). 'The Effects of Board Size and Diversity on Strategic Change', Strategic Management Journal 15: 241-250.
37. Goodwin - Stewart, J. and Kent P. (2006). Relation between external audit fees, audit committee characteristics and internal audit. Accounting & Finance 46(3): 387–404.
38. He, L., R. Labelle, C. Piot, & Thornton D. B. (2009). Board monitoring, audit committee effectiveness, and financial reporting quality: Review and synthesis of empirical evidence. Journal of Forensic & Investigative Accounting 1(2).
39. Herman, E. S. (1981). 'Corporate Control, Corporate Power', Cambridge University Press, Cambridge.
40. Hill, S. (1995). The Social Organization of Boards of Directors, The British Journal of Sociology 46(2): 245-278.
41. Hung, H. (1998). A Typology of the Theories of the Roles of Governing Boards, Corporate Governance: An International Review 6(2): 101-111.
42. Ika, S. R. and Ghazali N. A. M. (2012). Audit committee effects and timeliness of reporting: Indonesian evidence. Managerial Auditing Journal 27(4): 403–424.
43. Ingley, C. B. and Van der Walt N. T. (2001). The Strategic Board: the Changing Role of Directors in Developing and Maintaining Corporate Capability, Corporate Governance: An International Review 9(3): 174-185.
44. Iyer, V. M., E. M. Bamber, & Griffin J. (2013). Characteristics of audit committee financial experts:et al. 2013. Characteristics of audit committee financial experts: an empirical study. Managerial Auditing Journal 28(1): 65–78.
45. Jensen, M. C. and Meckling, W. H. (1976). Theory of the Firm: Managerial Behaviour, Agency Costs and Ownership Structure, Journal and Financial Economics 3: 305-360.
46. Johnson, J. L., Daily, C. M., et al. (1996). 'Boards of Directors: A Review and Research Agenda', Journal of Management 22(3): 409-438.
47. Kesner, I. F.and Johnson, R. B. (1990). An Investigation of the Relationship between Board Composition and Stockholder Suits, Strategic Management Journal 11(4): 327-336.
48. Kiel, G. C.and Nicholson, G. J. (2003). Board Composition and Corporate Performance: How the Australian Experience Informs Contrasting Theories of Corporate Governance, Corporate Governance: An International Review 11(3): 189-205.
49. Klein, A. (2002a). AC, board of director characteristics, and earnings management, Journal of Accounting and Economics 33(3): 375–400.
50. Klein, A. (2002b). Economic Determinants of AC Independent, The Accounting Review 77(2): 435-452.
51. Krishnan, G. V. and Visvanathan G.. (2008). Does the SOX Definition of an Accounting Expert Matter? The Association between Audit Committee Directors' Accounting Expertise and Accounting Conservatism*. Contemporary Accounting Research 25(3): 827–858.
52. Krishnan, J. and Lee J. E. (2009). Audit committee financial expertise, litigation risk, and corporate governance. Auditing: A Journal of Practice & Theory 28(1): 241–261.
53. Lavrakas, P.J. (1993). Telephone survey methods: sampling, selection and supervision', 2nd ed., Newbury Park, CA and London: Sage.
54. Li, J., M. Mangena, & Pike R. (2012). The effect of audit committee characteristics on intellectual capital disclosure. Accounting and Business Research 44(2): 98-110.
55. Liu, G. S. and Sun, P. (2005). The Class of Shareholdings and its Impacts on Corporate Performance: A Case of State Shareholding Composition in Chinese Public Corporations', Corporate Governance: An International Review 13(1): 46-59.
56. Lorsch, J. W. and MacIver, E. (1989). Pawns or Potentates: the Reality of America's Corporate Boards, Boston, MA, Harvard Business School Press.
57. Mace, M. L. G. (1971). Directors: Myth and Reality, Boston: Division of Research Graduate School of Business Administration Harvard University.
58. McNulty, T.and Pettigrew, A. (1999). Strategists on the Board, Organization Studies 20(1): 47.

© 2014 Global Journals Inc. (US)

59. Mizruchi, M. S. (1983). Who Control Whom? An Examination of the Relation between Management and Boards of Directors in Large American Corporations, Academy of Management Review 8(3): 426-435.
60. Mizruchi, M. S. and Stearns, L. B. (1988). A Longitudinal Study of the Formation of Interlocking Directorates, Administrative Science Quarterly 33(2): 194-210.
61. Muth, M.and Donaldson, L. (1998). Stewardship Theory and Board Structure: A Contingency Approach, Corporate Governance: An International Review 11(1): 52-64.
62. NPC (2006). Company Law of the People's Republic of China 中华人民共和国公司法, promulgated on 30 October 2005, enacted on 1 January 2006, Beijing: National People's Congress 全国人民代表大会, [online] Available at: http://www.acga-asia.org/public/files/China_Company_Law_Amended_Oct2005.pdf (accessed 22 July 2007).
63. NYSE (2003). Final NYSE Corporate Governance Rules. [online] Available at: http://www.nyse.com/pdfs/finalcorpgovrules.pdf
64. OECD (1999). OECD's definition is consistent with the one presented by Cadbury [1992, page 15], [online] Available at: www.encycogov.com
65. Pearce, J. A.and Zahra, S. A. (1991). The Relative Power of CEOs and Boards of Directors: Associations with Corporate Performance, Strategic Management Journal 12: 135-153.
66. Pettigrew, A. M. (1992). On Studying Managerial Elites, Strategic Management Journal 13: 163-182.
67. Pfeffer, J. (1972). Size and Composition of Corporate Boards of Directors: The Organization and its Environment, Administrative Science Quarterly 218-228.
68. Pfeffer, J. and Salancik, G. (1978). The External Control of Organizations: A Resource Dependence Perspective, Harper and Row, New York.
69. POB (1993). In the Public Interest: A Special Report, ('The 1993 POB Report'). Stamford, CT, USA: The Public Oversight Board (POB). AICPA.
70. Price Waterhouse (1993). Improving Audit Committee Performance: What Works Best, Altamonte Springs, FL: Institute of Internal Auditors Research Foundation.
71. Price, J. (1963). 'The Impact of Governing Boards on Organizational Effectiveness and Morale', Administrative Science Quarterly 8: 361-378.
72. Raghunandan, K. and Rama D. V. (2007). Determinants of audit committee diligence. Accounting Horizons 21(3): 265–279.
73. Rahman, R. A. and Ali F. H. M. (2006). Board, audit committee, culture and earnings management: Malaysian evidence. Managerial Auditing Journal 21(7): 783–804.
74. Sarkar, J. and Sarkar. S. (2012). Auditor and audit committee independence in India.
75. Sharma, V., V. Naiker, & Lee B. (2009). Determinants of audit committee meeting frequency: Evidence from a voluntary governance system. Accounting Horizons 23(3): 245–263.
76. Shleifer, A. and Vishny, R. W. (1997). A Survey of Corporate Governance, Journal of Finance 52(2): 737-783.
77. SOX (2002). The Public Company Accounting Reform and Investor Protection Act. ("The Sarbanes-Oxley Act"; "SOX"). United States Federal Law (Pub.L. 107-204, 116 Stat. 745, enacted 2002-07-30). Washington D.C., USA: The US Congress, [online] Available at: http://thecompliancepartners.com/pdf/sox.pdf and http://www.sec.gov/rules/final/33-8177.htm (accessed 22 July 2005).
78. SSE (2000). Shanghai Stock Exchange Guidelines for CGof Listed Companies 上市公司治理指引, promulgated 2000-12-02, Shanghai, China: Shanghai Stock Exchange 上海证券交易所(SSE). [online] Available at: http://blog.focus.cn/group/blogforum_detail.php?blog_id=2583717&msg_id=82514917
79. Stearns, L. B.and Mizruchi, M. S. (1993). Board Composition and Corporate Financing: The Impact of Financial Institution Representation on Borrowing, Academy of Management Journal 36(3): 603.
80. Stewart, J. and Munro L. (2007). The impact of audit committee existence and audit committee meeting frequency on the external audit: Perceptions of Australian auditors. International Journal of Auditing 11(1): 51–69.
81. Stiles, P. and Taylor, B. (2001). Boards at Work: How Directors View their Roles and Responsibilities, Oxford: Oxford University Press.
82. Su, X., Chen, S., & Wang, Z-I. (2005). An Analysis of Auditing Environment and Modified Audit Opinions in China: Underlying Reasons and Lessons. International Journal of Auditing 9(3): 165-185.
83. Useem, M. (1984). The Inner Circle: Large Corporations and the Rise of Business Political Activity in the U.S. and U.K., Oxford: Oxford University Press.
84. Valeas, N. and Theodorou, E. (1998). The Relationship Between Board Structure and Firm Performance in the UK, British Accounting Review 30: 383-407.
85. Van der Walt, N. and Ingley, C. (2003). Board Dynamics and the Influence of Professional Background, Gender and Ethnic Diversity of Directors, Corporate Governance: An International Review 11(3).
86. Vance, S. C. (1983). Corporate Leadership: Boards, Directors and Strategy, New York, NY: McGraw-Hill.

© 2014 Global Journals Inc. (US)

87. Wang W. C. (2005). The Research of Corporate Governance Structure (公司治理結構之研究). Mainland China People University Publisher (大陸人民大學出版社).
88. Wesphal, J. D. (1999). Collaboration in the Boardroom: Behavioural and Performance Consequences of CEO-Board Social Ties, Academy of Management Journal 42(1): 7-24.
89. Whisler, T. L. (1984). The Rules of the Game: Inside the Corporate Board Room, Homewood, IL: Dow Jones-Irwin.
90. Xiao, Z-z. J., Dahya, J. and Lin, Z-j. (2004). A Ground Theory Exposition of the Role of the Supervisory Board in China, British Journal of Management 15: 39-55.
91. Xie, B., Davidson, W. N. and DaDalt, P. J. (2003). Earnings Management and Corporate Governance: The Role of the Board and the Audit Committee, Journal of Corporate Finance 9: 295-316.
92. Yakasai, A. G. A. (2001). Corporate Governance in a Third World Country with Particular Reference to Nigeria, Corporate Governance: An International Review 9(3): 238-253.
93. Yin, F., S. Gao, W. Li, & Lv H. (2012). Determinants of audit committee meeting frequency: evidence from Chinese listed companies. Managerial Auditing Journal 27(4): 425–444.
94. Zald, M. (1967). Urban Differentiation, Characteristics of Boards of Directors and Organizational Effectiveness, American Journal of Sociology 73: 261-272.
95. Zeitlin, M. (1974). Corporate Ownership and Control: The Large Corporation and the Capitalist Class, American Journal of Sociology 79(5): 1073-1119.
96. Zhang, Y., J. Zhou, & Zhou N. (2007). Audit committee quality, auditor independence, and internal control weaknesses. Journal of accounting and public policy 26(3): 300–327.

© 2014 Global Journals Inc. (US)

Global Journal of Management and Business Research: D
Accounting and Auditing
Volume 14 Issue 5 Version 1.0 Year 2014
Type: Double Blind Peer Reviewed International Research Journal
Publisher: Global Journals Inc. (USA)
Online ISSN: 2249-4588 & Print ISSN: 0975-5853

The Stock Price Effect of the Affordable Care Act

By Ronald A. Stunda

Valdosta State University, United States

Abstract- This is the first empirical study to assess the stock price effect of the Affordable Care Act. The timeline for appropriate assessment begins when the Act became law on June 28, 2012 in a 5-4 decision by the United States Supreme Court. Although the study is constrained by the fact that not much time has passed since the June, 2012 Court decision, quarterly returns and stock prices were analyzed for each quarter beginning with the third quarter of 2012 and ending with the first quarter of 2014. This is referred to as the post-Act time period. The results were then compared to similar quarterly data for the period 2004-2007. This is referred to as the pre-Act period. Fifty-seven firms and 912 pre-Act firm quarters were assessed for 5 health care industries in the sector (hospital companies, diagnostic companies, medical device companies, drug manufacturing companies, and assisted living companies). These total firm quarters were then compared to the same 57 firms and 399 firm quarters in the post Act period. Findings indicate that stock prices of these firms are significantly positive in the pre-Act study period but significantly negative in the post-Act study period.

Keywords: affordable care act, obama care, share price response, health care industry.

GJMBR - D Classification : JEL Code : H54, H59

THESTOCKPRICEEFFECTOFTHEAFFORDABLECAREACT

Strictly as per the compliance and regulations of:

© 2014. Ronald A. Stunda. This is a research/review paper, distributed under the terms of the Creative Commons Attribution-Noncommercial 3.0 Unported License http://creativecommons.org/licenses/by-nc/3.0/), permitting all non-commercial use, distribution, and reproduction in any medium, provided the original work is properly cited.

The Stock Price Effect of the Affordable Care Act

Ronald A. Stunda

Abstract- This is the first empirical study to assess the stock price effect of the Affordable Care Act. The timeline for appropriate assessment begins when the Act became law on June 28, 2012 in a 5-4 decision by the United States Supreme Court. Although the study is constrained by the fact that not much time has passed since the June, 2012 Court decision, quarterly returns and stock prices were analyzed for each quarter beginning with the third quarter of 2012 and ending with the first quarter of 2014. This is referred to as the post-Act time period. The results were then compared to similar quarterly data for the period 2004-2007. This is referred to as the pre-Act period. Fifty-seven firms and 912 pre-Act firm quarters were assessed for 5 health care industries in the sector (hospital companies, diagnostic companies, medical device companies, drug manufacturing companies, and assisted living companies). These total firm quarters were then compared to the same 57 firms and 399 firm quarters in the post Act period. Findings indicate that stock prices of these firms are significantly positive in the pre-Act study period but significantly negative in the post-Act study period.

The analysis was then broken down by each of the five industries in both the pre and post-Act study periods. Findings again show that stock prices are significantly lower in post-Act time periods with hospital companies, diagnostic companies and medical device companies being the most pronounced in stock price decline.

These results have significant bearing on managers and investors in a post Affordable Care Act era. It is possible that the health care sector as a whole may experience continued downward pressure on both earnings and stock prices, while specific industries in the sector may experience more significant impact than others in the quarters and years to come.

Keywords: affordable care act, obama care, share price response, health care industry.

I. Introduction

Health care reform has been a major issue in the United States for the past several years. The result of this reform has consequences for the American consumer of those services, the taxpayers, the firms themselves, and for shareholders of the firms. The Patient Protection and Affordable Care Act (i.e., "Affordable Care Act" or "Obama Care") was signed into law by President Barack Obama on March 23, 2010. The intent of the law was to increase the number of Americans covered by health insurance and decrease the cost of that health insurance. In particular, a key provision of the bill, called the "individual mandate" requires that all Americans maintain a certain level of health insurance or face a penalty.

Author: Valdosta State University. e-mail: rastunda@valdosta.edu

The Affordable Care Act is not without controversy. In May of 2014, the Congressional Budget Office of the United States summarized the Pros and Cons of the Act. Below is their summary:

Pros:

1. Designed to reduce overall health care costs.
2. Make health care services available to 32 million uninsured Americans.
3. Make preventative services free to all Americans.
4. For those who can't afford it the Federal government will pay the states to add them to Medicaid.
5. Insurance companies cannot drop anyone once they get sick.
6. Insurance cannot deny coverage for preexisting conditions.
7. Children can be added to parents' insurance until age 26.
8. Does not apply to companies with fewer than 50 employees.

Cons:

1. 30 million Americans currently covered by private policies may be forced to pay for services they do not use or need.
2. Between 3-10 million people may lose company-sponsored health plans.
3. Increased coverage may in fact raise healthcare costs.
4. Those who do not elect a health care plan will be assessed a penalty (i.e., tax), at 2% of income, and enforced by the IRS.
5. Taxes were raised in 2013 on households earning in excess of $200,000 to help subsidize the Act.
6. Medical device manufacturers must pay a new 2.3% excise tax.
7. Drug companies will pay an estimated $84.8 billion in fees assessed by the Federal government..
8. Companies will be assessed a 40% excise tax on "Cadillac" health plans (i.e., "full coverage" plans) offered to employees, thus increasing premiums or deductibles.

The constitutionality of the Affordable Care Act was affirmed by the Supreme Court on June 28, 2012 in a 5-4 decision, with the declaration that the Act constituted a tax and therefore was legal. The upholding of the Act by the Supreme Court began to have implications on stock prices of firms impacted by the Act. Prior to the June, 2012 ruling of the High Court, the broad expectation was that the Act would be overturned, thus, most firms, and their investors, were not overly

© 2014 Global Journals Inc. (US)

concerned. In the week following the Supreme Court's decision, Health Care Industry stocks were down.

The mandate of the Act was that enrollment into a health plan be effective as of March 31, 2014. Although there does not currently exist enough data to make an informed decision on the stock price implications of the Act since March 31, 2014, we can, however, evaluate the industry stocks from the time of the Supreme Court decision in 2012 and compare the stock performance across firms in the sector to pre-Act periods to assess any significant changes between the two time frames. This would give us a broad perspective of how these firms are perceived from a stockholder perspective.

II. Literature Review

To assess the stock price impact of the Affordable Care Act, event study methodology is utilized. Fama, Fisher, Jensen and Roll (1969) first use this methodology for determining the impact of legislative rulings on publicly traded firms. It has since become the standard analytical procedure.

Jayachandran (2006) observed the effect of an unexpected change in party Congressional control on industry stock prices utilizing this methodology. The impact on health care firms resulting from changes in federal health care policies have also been analyzed in detail with a similar procedure. Kawaura and Sumner (1995) analyzed the impact of patent reform on pharmaceutical companies. Their findings show that these companies were significantly hurt by the reform.

Other studies have attempted to analyze the impact of national health reform in the United States on health care firms. Ellison and Mullin (2001) utilized regression analysis in their event study and found that the Clinton health reform plan introduced between 1992-1993 had a significant negative impact on pharmaceutical company stock prices.

Miller and Al-Ississ (2010) began some initial research on the Obama health reform plan. The analysis was, however, limited to the comparison of the Massachusetts health care plan. Findings indicate that healthcare firms serving the Massachusetts market experienced a decline in stock prices after adoption of the plan.

The simple fact is that no study to date has endeavored to analyze the stock-price effect of the Affordable Care Act. This study will attempt to do just that through analysis of five major industries in the health care sector: 1) Hospital companies, 2) Diagnostic companies, 3) Medical device makers, 4) Drug manufacturers, and 5) Assisted living facilities. Security prices for these firms will be assessed for two periods: 1) Pre-Affordable Care Act time frame (2004-2007), and 2) Post-Affordable Care Act time frame (third quarter 2012- first quarter 2014). Although limited in time scope, this study will allow us to see ramifications of the Act on security prices of affected firms and stockholders.

a) Hypotheses Development

As previously noted, no current research assesses the stock price effect of the Affordable Care Act. In an effort to do just that, the stock price effects for a sample of health care sector firms are analyzed by quarter for a period prior to enactment of the Act, i.e., 2004-2007, for a total of 16 quarters. These years were selected because they exemplify a return to normalcy after the effects of 9/11 and before the effects of the ensuing recession. The stock price effects of these same firms are analyzed after the Supreme Court ruling establishing the Act as law, i.e., third quarter of 2012 through first quarter of 2014, for a total of 7 quarters. If the Act has no discernible difference across time periods, we should not see significant differences between the pre and post stock prices. This gives rise to the first hypothesis, stated in the null form:

H1: The share price responses to unexpected earnings in a pre-Affordable Care Act environment for health care related firms are not significantly different from those in a post-Affordable Care Act environment.

The broad changes in health care associated with the Affordable Care Act have undoubtedly affected some health care related industries more than others. In an attempt to better assess this effect, the analysis of hypothesis 1 is further detailed by five major industries impacted by the act, namely:

1. Hospital companies
2. Diagnostic companies
3. Medical device makers
4. Drug manufacturers
5. Assisted living facilities

Using the same premise as hypothesis 1, if the Act has no discernible difference across time periods, we should not see significant differences between the pre and post stock prices among the industries. This gives rise to the second hypothesis, stated in the null form:

H2: The share price responses to unexpected earnings in a pre-Affordable Care Act environment for health care related industries are not significantly different from those in a post-Affordable Care Act environment.

b) Sample Selection

The purpose of this study is to investigate the share price behavior of publicly traded health care firms in the presence both a pre- and post-Affordable Care Act time frame. Following Chang, Cheng and Reichelt (2010), the study is partitioned using a pooled time series approach. The pre-Act period is 2004-2007 (16 quarters) and the post-Act period is third quarter 2012 through first quarter 2014 (7 quarters). Two databases were assembled for health care related sector firms, one for pre and the other for post time periods. A Lexis-

© 2014 Global Journals Inc. (US)

Nexis and Electronic Data-Gathering, Analysis and Retrieval (EDGAR) search was then made to discover the appropriate release date of the firms' 10Qs.

Table 1 summarizes the sample of firms, by health care industry, used in the study for each of the time periods analyzed.

Table 1 : Study Sample by Sample Period

	Pre-Act (Firm Quarters)	Post-Act (Firm Quarters)
Hospital companies	7 (112)	7 (49)
Diagnostic companies	6 (96)	6 (42)
Medical device makers	19 (304)	19 (133)
Drug manufacturers	15 (240)	15 (105)
Assisted living facilities (160) (70)	10	10
Total	57 (912)	57 (399)

III. Methodology

a) *Hypothesis One*

The purpose of the test of the first hypothesis is to assess the relative information content of unexpected earnings of share prices in a pre and post Act environment for total firms in the sample. The following model is used to evaluate information content:

$$CAR_{it} = a + b_1UE_{pre} + b_2UE_{post} + b_3MB_{it} + b_4B_{it} + b_5MV_{it} + e_{it} \quad (1)$$

Where: CAR_{it} = Cumulative abnormal return firm i, time t

a = Intercept term

UE_{pre} = Unexpected earnings for firm i, time t, for all pre-Act firms in sample

UE_{post} = Unexpected earnings for firm I, time t, for all post-Act firms in sample

MB_{it} = Market to book value of equity as proxy for growth and persistence

B_{it} = Market model slope coefficient as proxy for systematic risk

MVit = Market value of equity as proxy for firm size

e_{it} = error term for firm i, time t

The coefficient "a" measures the intercept. The coefficient b_1 is the earnings response coefficient (ERC) for all pre-Act firms in the sample (57 firms, 912 firm quarters). The coefficient b_2 is the earnings response coefficient (ERC) for all post-Act firms in the sample (57 firms, 399 firm quarters). The coefficients b_3, b_4, and b_5, are assessed for any potential contributions to the ERC for all firms in the sample. To investigate the effects of the information content of the ERC, there must be some control for variables shown by prior studies to be determinants of ERC. For this reason, the variables represented by coefficients b_3 through b_5 are included in the study. Unexpected earnings (UE_i) is measured as the difference between the actual earnings (EA_i) and security market participants' expectations for earnings proxied by consensus analyst following as per Investment Brokers Estimate Service (IBES) (EX_i). The unexpected earnings are scaled by the firm's stock price (Pi) 180 days prior to the forecast:

$$UE_i = \frac{(EA_i - EX_i)}{P_i} \quad (2)$$

For each cross sectional sample firm, an abnormal return (AR_{it}) is generated for event days –1, 0, and +1, where day 0 is defined as the quarterly earnings release date identified by EDGAR. The Dow Jones News Retrieval Service (DJNRS) is also reviewed to insure that confounding factors, such as change of corporate ownership or form, or management change, are minimized by excluding any firms which contain these events. The market model is utilized along with the CRSP equally-weighted market index and regression parameters are estimated between –290 and –91. Abnormal returns are then summed to calculate a cumulative abnormal return (CAR_{it}). Hypotheses 1 is tested by examining the coefficients associated with the quarterly unexpected earnings of pre and post Act firms' financial reports (i.e., b_1 and b_2). There are two possible conclusions; results may be noisy, or interpreted as being less beneficial to investors, which in this event, b_1, $b_2<0$, or these firms will possess an information-enhancing signal to the investor, which will result in b_1, $b_2>0$. Subsequent significance is then assessed.

b) *Hypothesis Two*

The purpose of the test of the second hypothesis is to assess the relative information content of unexpected earnings of share prices in a pre and post-Act environment for firms by industry membership. A model similar to the one utilized for hypothesis one is again used for hypothesis two:

© 2014 Global Journals Inc. (US)

$CAR_{it} = a + b_1D_1UE_{hc} + b_2D_2UE_{dc} + b_3D_3UE_{md} + b_4D_4UE_{dm} + b_5D_5UE_{al} + b_6MB_{it} + b_7B_{it} + b_8MV_{it} + e_{it}$ (3)

Where: CAR_{it} = Cumulative abnormal return firm i, time t

a = Intercept term

D_1UE_{hc} = Dummy variable for all hospital companies firm quarters in sample where 1 = post-Act, 0 = pre-Act

D_2UE_{dc} = Dummy variable for all diagnostic companies firm quarters in sample where 1 = post-Act, 0 = pre-Act

D_3UE_{md} = Dummy variable for all medical device companies firm quarters in sample where 1 = post-Act, 0 = pre-Act

D_4UE_{dm} = Dummy variable for all drug manufacturing companies firm quarters in sample where 1 = post-Act, 0 = pre-Act

D_5UE_{al} = Dummy variable for all assisted living companies firm quarters in sample where 1 = post-Act, 0 = pre-Act

MB_{it} = Market to book value of equity as proxy for growth and persistence

B_{it} = Market model slope coefficient as proxy for systematic risk

MV_{it} = Market value of equity as proxy for firm size

e_{it} = error term for firm i, time t

Ordinary least squares (OLS) regression is used to test the model for hypothesis one and two. Cross-sectional dependence and heteroskedasticity are not likely to be present in stock return metrics since sample firms are not affected by common event dates. (Binder 1985; Bernard 1987; Grammatikos and Yourougou 1990). However, whenever a set of multiple regression variables are employed, there is a probability of the presence of multicollinearity within the set of independent variables which may be problematic from an interpretive perspective. To assess the presence of multicollinearity, the Variance Inflation Factor (VIP) is utilized.

IV. Results

a) Hypothesis One Results

As indicated in Table 2, the response coefficient b_1, representing unexpected earnings for all pre-Act firms was .10 with a p-value of .01. Coefficient b_2, representing post-Act firms was -.03 with a p-value of .01. The other control variables were not found to be significant at conventional levels. This finding indicates that when assessing the impact of the Affordable Care Act from a total firm perspective, there tends to be a significant positive impact on stock prices of the pre-Act time periods but a significant negative impact on stock prices of the post-Act time periods. Hypothesis one, which suggests no difference between the two sample groups must, therefore, be rejected.

In addition, whenever a set of multiple regression variables are employed, there is a probability of the presence of multicollinearity within the set of independent variables which may be problematic from an interpretive perspective. To assess the presence of multicollinearity, the Variance Inflation Factor (VIP) was utilized. Values of VIP exceeding 10 are often regarded as indicating multicollinearity. In the test of hypothesis 1, a VIP of 1.5 was observed, thus indicating the non-presence of significant multicollinearity.

Table 2 : Stock Price Effect of Pre-Act and Post-Act Firms

Test of Hypothesis 1

Model: $CAR_{it} = a + b_1UE_{pre} + b_2UE_{post} + b_3MB_{it} + b_4B_{it} + b_5MV_{it} + e_{it}$

a	b_1	b_2	b_3	b_4	b_5	Adj. R^2
.03	.10	-.03	.10	.07	.15	.235
(.50)	(2.47)[a]	(2.59)[a]	(.48)	(.32)	(.26)	

b_1 = information content of all pre-Act firm quarters in the sample (912)
b_2 = information content of all post-Act firm quarters in the sample (399)
b_3 = control variable for growth and persistence
b_4 = control variable systematic risk
b_5 = control variable firm size
[a] = significant at .01 level

b) Hypothesis Two Results

The response coefficients for the five industries represented by dummy variables are presented in Table 3. As indicated, all post-Act stock prices show a significant decline from pre-Act time periods. The decline is most pronounced for hospital companies (-.06, p-value of .01), diagnostic companies (-.11, p-value of .01), and medical device companies (-.16, p-value of .01). Drug manufacturing companies show a decline that is less dramatic (-.02, p-value of .05), with similar results for assisted living companies (-.01, p-value .10). The other control variables were not found to be significant at conventional levels. This finding indicates that when assessing the impact of the Affordable Care Act from a health care industry perspective, there tends to be a significant negative impact on stock prices of the

© 2014 Global Journals Inc. (US)

post-Act time periods for all industries with hospital companies, diagnostic companies, and medical device companies being most pronounced. Hypothesis two, which suggests no difference between the two time period groups by industry must, therefore, be rejected.

The Variance Inflation Factor (VIP) was again utilized to assess multicollinearity in the regression model. In the test of hypothesis 2, a VIP of 1.9 was observed, thus indicating the non-presence of significant multicollinearity.

Table 3 : Stock Price Effect of Pre-Act and Post-Act Firms by Industry

Test of Hypothesis 2

Model: $CAR_{it} = a + b_1D_1UE_{hc} + b_2D_2UE_{dc} + b_3D_3UE_{md} + b_4D_4UE_{dm} + b_5D_5UE_{al} + b_6MB_{it} + b_7B_{it} + b_8MV_{it} + e_{it}$

a	b_1	b_2	b_3	b_4	b_5	b_6	b_7	b_8	Adj. R^2
.04	-.06	-.11	-.16	-.02	-.01	.13	.09	.06	.228
(.36)	(2.36)[a]	(2.41)[a]	(2.39)[a]	(1.95)[b]	(1.59)[c]	(.22)	(.45)	(.31)	

b_1 = information content for hospital companies
b_2 = information content for diagnostic companies
b_3 = information content for medical device companies
b_4 = information content for drug manufacturing companies
b_5 = information content for assisted living companies
b_6 =control variable for growth and persistence
b_7= control variable systematic risk
b_8 = control variable firm size

[a] = significant at .01 level
[b] = significant at .05 level
[c]= significant at .10 level

Dummy variable = 1 for post-Act time periods and 0 for pre-Act time periods

V. Conclusion

This is the first empirical study to assess the stock price effect of the Affordable Care Act. The timeline for appropriate assessment begins when the Act became law on June 28, 2012 in a 5-4 decision by the United States Supreme Court. Although the study is constrained by the fact that not much time has passed since the June, 2012 Court decision, quarterly returns and stock prices were analyzed for each quarter beginning with the third quarter of 2012 and ending with the first quarter of 2014. This is referred to as the post-Act time period. The results were then compared to similar quarterly data for the period 2004-2007. This is referred to as the pre-Act period. Fifty-seven firms and 912 pre-Act firm quarters were assessed for 5 health care industries in the sector (hospital companies, diagnostic companies, medical device companies, drug manufacturing companies, and assisted living companies). These total firm quarters were then compared to the same 57 firms and 399 firm quarters in the post Act period. Findings indicate that stock prices of these firms are significantly positive in the pre-Act study period but significantly negative in the post-Act study period.

The analysis was then broken down by each of the five industries in both the pre and post-Act study periods. Findings again show that stock prices are significantly lower in post-Act time periods with hospital companies, diagnostic companies and medical device companies being the most pronounced in stock price decline.

These results have significant bearing on managers and investors in a post Affordable Care Act era. It is possible that the health care sector as a whole may experience continued downward pressure on both earnings and stock prices, while specific industries in the sector may experience more significant impact than others in the quarters and years to come.

References Références Referencias

1. Bernard, V. 1987. Cross-sectional dependence and problems in inference in market-based accounting research. *Journal of Accounting Research* 25 (Spring): 1-48.
2. Binder, J. 1985. Measuring the effects of regulation with stock price data. *Rand Journal of Economics*16 (Summer): 167-183.
3. Chang, H., C.S. Agnes Cheng, and K. Reichelt. 2010. Market reaction to auditor switching from Big 4 to third-tier small accounting firms. *Auditing: A Journal of Practice &Theory* 29(2): 83-114.
4. Ellinson, S. and W. Mullin. 2001. Gradual incorporation of information: pharmaceutical stocks

© 2014 Global Journals Inc. (US)

and the evolution of health care reform. *Journal of Law and Economics*, Vol. 44 (2) 89-129.

5. Fama, E., L. Fisher, M. Jensen, and R. Roll. 1969. The adjustment of stock prices to new information. *International Economic Review*, Vol. 10, February, 1969, 1-21.
6. Grammatikos, T. and P. Yourougou. 1990. Market expectations of the effects of the Tax Reform Act of 1986 on banking organizations. *Journal of Banking and Finance* 14 (December): 1171-1187.
7. Jayachandran, S. 2006. The Jeffords effect. *The Journal of Law and Economics*, Vol. 49(2), October, 397-425.
8. Kawaura, A. and J. Sumner 1995. Japan shifts from process to product patents in the pharmaceutical industry: an event study of the impact on Japanese firms. *Journal of Public Economics*, Vol. 33 (1), January, 88-103.
9. Miller, N. and M. Al-Ississ. 2010. What does health care reform mean for the health care industry? *NBER Working Paper No. 16193*, July.

© 2014 Global Journals Inc. (US)

Global Journal of Management and Business Research: D
Accounting and Auditing
Volume 14 Issue 5 Version 1.0 Year 2014
Type: Double Blind Peer Reviewed International Research Journal
Publisher: Global Journals Inc. (USA)
Online ISSN: 2249-4588 & Print ISSN: 0975-5853

An Analysis on the Impact of Participatory Budgeting and Procedural Fairness toward Manager's Commitment and Performance

By Widia Astuty

Universitas Muhammadiyah Sumatera Utara, Indonesia

Abstract- This study aims to test the effect of participatory budgeting and procedural fairness on the manager's commitment and performance either have simultaneous or partial effect. The method of the research used was a survey method that conducted at the pawnshop in North Sumatra with the respondents of the managers in branch offices. The data used is primary data by collecting data through questionnaires. The analysis method used is descriptiveanalytical verification. The effect model analyzed by using a structural equation model to analyze the pattern of causal relationships between variables and determine the direct, indirect and total effect of some variables.

Keywords: participatory budgeting, procedural fairness, manager's commitment, manager's performance.

GJMBR - D Classification : JEL Code : H61

AN ANALYSISONTHEIMPACTOFPARTICIPATORYBUDGETING ANDPROCEDURALFAIRNESSTOWARD MANAGERSCOMMITMENTANDPERFORMANCE

Strictly as per the compliance and regulations of:

© 2014. Widia Astuty. This is a research/review paper, distributed under the terms of the Creative Commons Attribution-Noncommercial 3.0 Unported License http://creativecommons.org/licenses/by-nc/3.0/), permitting all non-commercial use, distribution, and reproduction in any medium, provided the original work is properly cited.

An Analysis on the Impact of Participatory Budgeting and Procedural Fairness toward Manager's Commitment and Performance

Widia Astuty

Abstract- This study aims to test the effect of participatory budgeting and procedural fairness on the manager's commitment and performance either have simultaneous or partial effect. The method of the research used was a survey method that conducted at the pawnshop in North Sumatra with the respondents of the managers in branch offices. The data used is primary data by collecting data through questionnaires. The analysis method used is descriptive-analytical verification. The effect model analyzed by using a structural equation model to analyze the pattern of causal relationships between variables and determine the direct, indirect and total effect of some variables. The results showed that participatory budgeting and procedural fairness simultaneously have a significant and positive effect on the manager's commitment; participatory budgeting has a significant and positive effect on the manager's commitment; procedural fairness has a significant and positive effect on the manager's commitment; participatory budgeting, procedural fairness and manager's commitment simultaneously has a significant and positive effect on the manager's performance; the effect of participatory budgeting has a significant and positive effect on the manager's performance; the procedural fairness has a significant and positive effect on the manager's performance; the manager's commitment has a significant and positive effect on the manager's performance.

Keywords: participatory budgeting, procedural fairness, manager's commitment, manager's performance.

I. Introduction

A pawnshop as one of the State-Owned Enterprises (SOEs) in the Ministry of Finance that deliver short-term loans. This pawn lending have been enjoyed, not only for the economically weak people but it has been penetrated into the middle to upper level of income who live in rural and urban areas. To improve the effectiveness and efficiency of the pawnshop, the government intended to change the form of the pawnshop's company, however, there are consequences for the fundamental changes which include; (i) pawnshop have dual functionality that are to serve the community and profit orientation; (ii) the organization is based on decentralization; (iii) decrease in interest rates; (iv) additional in credit limit; and (v) changes in capital structure.

Author: Faculty of Economics, Universitas Muhammadiyah Sumatera Utara Medan, Indonesia. e-mail: widiaumsu@gmail.com

As a non-bank financial institutions, the pawnshop providing services to the community aims to cultivate a profit by exploiting all the potential based on the principles of management of the company. The capital of the pawnshop originally comes from the government through the state budget, but now the capital structure changed to; (i) the foreign capital which consists of the national budget and profits are reserved before this pawnshops established; (b) loan from BRI (People's Bank of Indonesia); and (ii) the capital from the pawnshop itself which consists of: (a) retained earnings; and (b) various kinds of reserves. While, the fund management at branch offices based on the principles of money cash management. With this principle, it is expected that the funds are not embedded too much, so it does not interfere with the business operation. This is in accordance with the policies outlined by the directors, so that the financial management of the company is really effective and efficient.

The organizational structure of the pawnshop can be seen clearly by the duties, authority and responsibilities of each personnel as well as the relationship between other sections vertically or horizontally. Maryanto (2004) posited that the pawnshop with a decentralized organization has given authority to the regional Office to prepare an annual budget that includes budget for the branches within its territory. Thus each unit of the organization can work more effectively and efficiently in achieving the expected profit whereby the pawnshop has done several ways, include; (i) engaging the branch office manager in the preparation of the budget due to responsibility for achieving the company's earnings through the realization of revenue and control costs occur in each of the organization units; (ii) engaging the branch office manager in the decision making process related to the organizations (Maryanto, 2004). Although the branch managers involved in budgeting and decision-making process, but the results of the preliminary study are interesting phenomenon to do more in terms of assessment of the level of involvement of the manager of a branch office in the preparation of the budget. When the decision on the allocation of the budget to be unjust, then the manager will look at how the decision-making process or procedure is determined (Folger, 1986). He added, if the

© 2014 Global Journals Inc. (US)

budget allocation decision having a fair procedure, then it will affect the performance.

According to Hansen and Mowen (2005: 267), an organization needs to translate the overall budget strategy into plans and short-term goals and long term. A budget is a plan prepared quantitatively, generally in the size units of money, which includes a specific time, usually one year. This prepation of a budget helps the management to communicate the goals of the organization to all managers. In addition, the budget is the information for the managers to realize the budget through analyzing specific needs and behavioral patterns. Moreover, the budget process is basically a negotiation between the managers in setting up the goals and actions which followed with its' implementation. The budget that has been approved by the supervisor contains income expected to be earned in the fiscal year, and sources must be used to achieve overall corporate objectives.

According to Siegel and Marconi (1989: 199), an organization run by humans and the actual performance evaluation is an assessment of human behavior in carrying out its role in the organization. Therefore, the budget often can have an impact on the psychological and behavioral responsibility of the managers.

Budget may lead to functional and dysfunctional behavior. In other words, there are positive and negative effects of the budget on the motivation and behavior of those involved in the budget. Functional behaviors would help and support the achievement of goals, otherwise dysfunctional behavior could be an obstacle to the achievement of corporate goals. Negative behavior arises because of the pressure by the budget system adopted by managers that decreased the performance (Siegel & Marconi, 1989: 128). While positive behavior arises when individual manager and organizational goals are combined to achieve it.

Research has shown that the participation of the budget has a positive effect on the motivation of management (Anthony & Govindarajan, 2003: 420), while participation refers to a process of shared decision making by two or more parties initiated for the future outcomes. To see the extent of the performance achieved by the managers can be seen from the report or accounting information presented by companies or called as management accounting information. This management accounting information is needed by managers as the information useful in the decision-making process. While, the accounting information also needed in the process of budget preparation and control and for assessing the performance of the managers.

Anthony and Govindarajan (2003), suggests that the process of budget preparation and control of the business and operations embodied aspects of human behavior. The budget is basically the end result of negotiations between the units' managers or as the central of responsibility with their supervisor to determine the goals and actions to be performed. Thus, the critical issue in budgeting lies in the aspect of human behavior that is contained in the budget.

The process of planning and control in budgeting and business operations are basically the process of defining the role for managers in the levels of the organization to carry out the activities in achieving corporate goals which include setting up the resources to carry out the obligations. The prepared budget as the a plan that will guide the implementation and controlling tool in its execution, thus the deviation occured on the plans can be immediately known the person in charge who was responsible and followed by acting immediate corrective.

To see to what extent a responsibility center has reached the target, it can be seen from the report of a central achievement of accountability. The work of a responsibility center is successful when the goals stated in the articles can be achieved, otherwise considered less successful when the goals stated in the budget is not achieved. The results of these comparisons may lead to a difference (deviation). Significant deviations needs to be further analyzed, in order to know what factors that cause such deviations. By knowing the factors that cause the occurrence of irregularities, will allow management to undertake corrective action, so that deviations from this budget can be eliminated or at least minimized, to avoid any wastage and encourage managers to improve performance. Meanwhile, the role of managers in planning and controlling budgets and business operations, are conducted according to the principles "bottom up-top down" that each organizational unit managers to create and submit their respective draft budget to the budget committee by considering the existing economic resources, then combined with mutual consent.

Here it appears that the managers' involvement or participation in budgeting began from designing the central budget of their accountability respectively, to the implementation and control. Thus through this participation, the managers feel their aspirations are valued and have an influence on the formulation of the budget. The inconsistent results of these findings are encourage the researchers to evaluate various factors or variables that may affect the relationship between the participatory budgeting with the managers' performance.

II. Literature Review

Individuals within an organization are often influenced by their perceptions of the budget fairness. Generally, one would compare the budget that has been set up for him with other parties at the same level. An individual's perception of fairness is based on the target

© 2014 Global Journals Inc. (US)

and process that becomes the motivation for individuals to achieve a set budget (Lindquist, 1995; Libby, 1999).

One of the theory that tested the fairness is the referent cognitions theory. According to this theory, when individuals receive unfair outcomes, their judgment becomes attached to referent or other parties (Folger, 1986). Therefore, one would compare the outcomes they receive with referent outcomes, such outcomes were due to receive or received by others with equivalent positions. The fairness can be viewed from two sides, namely distributive fairness and procedural fairness. Distributive justice is an individual's perception of the fairness distribution of organizational outcomes, while procedural justice relates to fairness and feasibility of the procedures used to allocate or distribute the decisions within the organization (Kreitner & Kinicki, 2000).

This study analyzed the effect of managers' perceptions of fairness in terms of procedural fairness, with the following considerations: First, the participation of managers in budgeting allows managers to influence the allocation or distribution of the budget. Second, the principle of the procedure is a mechanism for determining the decision, including the decision to distribution. This means whether the allocation is fairly done or otherwise will depend on how the budget allocation decision procedures are been set. Perceptions of managers on procedural justice if the decision on the allocation or distribution of the budget is set based on reasonable or fair procedure. Similarly, although the manager in carrying out its activities are often faced with budget constraints, but if the budget allocation decision is determined based on a fair procedure, the top managers' perceptions of procedural fairness will increase. Cropanzano and Folger (1991) suggested that if the process used to decide the amount of budget allocation is reasonable, then the subordinate actions will lead to improve performance. Thus top managers' perceptions of procedural fairness is an important factor that must be considered in designing a budget.

The concept and measurement of commitment to goals is a key aspect of the theory of goal setting. According to this theory, a commitment to the goals is refers to an individual commitment in achieving the organizations' goal. According to Locke (1981) in Chong and Chong (2002), the manager's commitment is a strong determination to achieve a goal on the budget that continually striving to reach it all the time. The commitment to a goal is a level of individual commitment to achieve certain goals. Individuals who have a high commitment to the objectives of the budget will always increase its efforts to achieve those goals, so it will have an impact on performance. In contrast, individuals who do not have a commitment to achieve the goal on budget will result in a lower performance level. Murray (1990) and Wentzel (2002) found the evidence that the manager's commitment has positive influence on the performance of managers.

The performance is the success rate of individuals or managers in carrying out the work. In this research plan, the manager at the pawnshop branch office becomes the object of the performance measure as the managers of profit centers. As the profit center managers, the manager is responsible for the achievement of the unit profit organization they lead. Their performances are based on the difference between revenue with expenses gained that should be realized (Hansen & Mowen, 2005; Anthony & Govindarajan, 2003). In relation to the previous description about the participatory budgeting and procedural justice, it has raised questions about whether the two variables actually affect the manager's commitment to the goals on budget or otherwise. Or is there any relationship among these variables in the performance of managers. Similarly with the commitment of the managers on budgetary purposes that may have an affect to their performance. Accordingly, the reciprocal relationship and interplay between these factors will be tested in this study. Thus, the study examines the effect of participatory budgeting and procedural fairness to the commitment and performance of managers is interesting to be conducted in the development of sciences. The following are the considerations of the researchers to conduct a study of these variables:

Firstly, the studies that examine the effect of participatory budgeting on the performance of the manager still showed inconsistent results. According to Govindarajan (1986), in order to reconcile the inconsistent results, he proposed to use the contingency approach through evaluation of various conditional factors, so as to improve the effectiveness of participatory budgeting that influence on the performance of managers. This study uses the conditional factor of commitment as an intervening variable. The intervening variable is a variable that is affected by a variable and affect other variables (Shields & Young, 1993; Shields & Shields, 1998). Secondly, by incorporating a different procedural fairness variable both in terms of the structure of the model and the findings of existing research, it is expected to further enrich the models in the field of management accounting and the behavioral aspects of accounting to guide the behavior of members of the organization in achieving the goals on budget as well as to shows the originality of this study. Thirdly, this study of pawnshop assessment is done for an effort to increase the commitment of the managers in the organization, so that the expected achievements to be achieved. The achievement of performance at each branch offices is very important because it is not only used to fulfill obligations to third parties but also to provide bonuses or to open a new branch office of pawnshop in other

© 2014 Global Journals Inc. (US)

areas. With the increasing number of pawnshop branches, the role of pawnshop is expected to assist the government programs to improve the societal welfare economically.

III. Methodology

This study aims to obtain a description of the effect of participatory budgeting and procedural fairness on commitment and performance managers at the pawnshop in North Sumatra province. Both two types of descriptive and verificative methods are used to analyze the data of the study. The behavioral aspect of accounting on management accounting is used as the basis of the study with the emphasis on budget issues. Types of relationships between variables are causality in which the independent variable is participatory budgeting and procedural fairness serves as a cause of the variable, while the dependent variable is the commitment and performance of managers as a effect of the variable.

a) *Operationalization of Variables*

Table 1 : Operationalization of Variables

Variable	Dimension	Indicator	Item No.	Scale
Budgeting Participatory (X_1) Milani (1975), Kennis (1979), Brownell and Mc Innes (1986), Wentzell (2002), Widia (2012)	Participation of managers	1. Participation in budgeting 2. The opportunity to propose a budget 3. The effect of the proposal on the final approved budget 4. Participation in the revised budget 5. Direction of top-level corporate managers	1 2 3,4 5 6	Ordinal
	Influence / Benefits of Participation	1. Clarify the purpose of the budget 2. Creating the goal congruence 3. Increasing the manager's commitment 4. Increase the achievement	7 8 9 10	Ordinal
Procedural Fairness (X_2) Lau and Lim (2006), Wentzell (2002)	Budget Preparation Procedures. Control Procedures	1. Consistency 2. Timeliness 3. Independence in preparing the draft budget 4. Compliance with ethical and moral procedures 5. Accuracy of information 6. The attention of top-level managers 7. Procedure budget evaluation 8. Feedback budget 9. Procedure promotion 10. Giving bonuses	11 12 13 14 15 16, 17 18 19 20 21	Ordinal
Manager's Commitment (Y) Hollenbeck et al. (1989), Wright et al. (1994), Chong and Chong (2002)	The Importance of Goals of The Budget.	1. Acceptance of budget goals as personal goals 2. Willingness to implement budget 3. Satisfaction/pride 4. Failure feeling if the budget is unachieved 5. Develop a sense of challenge 6. Sense of responsibility and great care	22 23 24 25 26 27	Ordinal
	Level of Effort Required to Achieve Objectives	1. Willingness to work hard 2. Inspiration looking for the best way to improve performance 3. Willingness to provide the best capability	28 29 30	
Manager's Performance (Z) Outlay, (1978), Siegel and Marconi (1989)	Earnings Achievement	1. Control/cost efficiency 2. Achievement of revenue	31 32	Ordinal

b) *Population and Instrument Tests*

The population of this study is all 212 the pawnshop branches located in North Sumatra where the respondents are the individual of branch managers that have the responsibility as the managers of profit center. This study used a census of the entire population as the unit of analysis. Both validity and reliability are used in this study. Validity test results have shown that all of the items are valid, while the reliability coefficient of the questionnaire examining the five variables are all greater

© 2014 Global Journals Inc. (US)

than 0.7, so that it can be concluded that the instrument measures used in this study have given consistent results.

c) Analysis and Hypothesis Test

The analysis used to test the hypothesis in this study is the Structural Equation Modeling (SEM) using AMOS 16. SEM is a set of statistical techniques that allow the testing of a set of relationships that are relatively "complex" simultaneously (Ferdinand, 2002). Since all variables are in ordinal-typed of scale, while the use of path analysis requires the data to be in interval, then the original data transformed into ordinal interval data via the method of successive interval with the following steps:

1. Pay attention to each statement (item)
2. For the said statement, the number of respondents is determined to have a score of 1, 2, 3, 4, and 5 in order to obtain the frequency (F)
3. Each frequency is divided by the total number of respondents in order to obtain the proportion (p)
4. The proportion is summed up sequentially for each answer's scores in order to obtain the cumulative proportion (pk)
5. Using the chart interval, the Z value is calculated for each cumulative proportion obtained
6. Determine the value of the interval for each value of Z with the following formula:

$$SV = \frac{\textit{Density at lower limit} - \textit{Density at upper limit}}{\textit{Area under upper limit} - \textit{Area under lower limit}}$$

Furthermore, as a benchmark for the closeness to state the high and low estimates of the indicator, the correlation relationship or the strength of the effect is referring to the standard categories of Guilford (Guilford, 1956: 145) with the following criteria:

Table 2 : Criteria of Relationship Level

Correlation Value	Particular
< 0.20	The relationship is low or the influence is weak which almost negligible.
0.20 – 0.40	The relationship is low or the influence is weak.
0.40 – 0.60	The relationship/influence is moderate.
0.60 – 0.80	The relationship/influence is high.
0.80 – 1.00	The relationship/influence is very high.

Source: Guilford (1956: 145)

IV. Findings

a) The Collection of Data

The data were obtained from the respondents; the managers of pawnshop branch offices in North Sumatra using a questionnaire survey tool. Below is the table of questionnaires rate of return from respondents:

Table 3 : Distribution of Questionnaires

Particular	Total	Percentage
Distributed Questionnaires	212	100%
Returned Questionnaires	207	97.64%
Unreturned Questionnaires	5	2.36%
Questionnaires Analysized in the Research	202	95.28%

b) Hypothesis Test

The structural model is built by a relationship among latent variables (construct) whereby the indicators have been tested for validity and reliability in the measurement model. In accordance with the research paradigm that has been stated previously, the structural relationship between variables is composed of two sub-structures, namely:

1. Effect of participatory budgeting and procedural fairness to the manager's commitment

© 2014 Global Journals Inc. (US)

2. Effect of participatory budgeting and procedural fairness, and commitment to the performance of managers.

c) The Effect of Participatory Budgeting and Procedural Fairness on Manager's Commitment

The sub-structures analyzed in this study is the participatory and procedural fairness affect either simultaneously or partially on the manager's commitment. Path diagram of structural equation model of the influence of participatory budgeting (X1) and procedural fairness (X2) to the managers' commitment (Y), is presented in Figure 1 below.

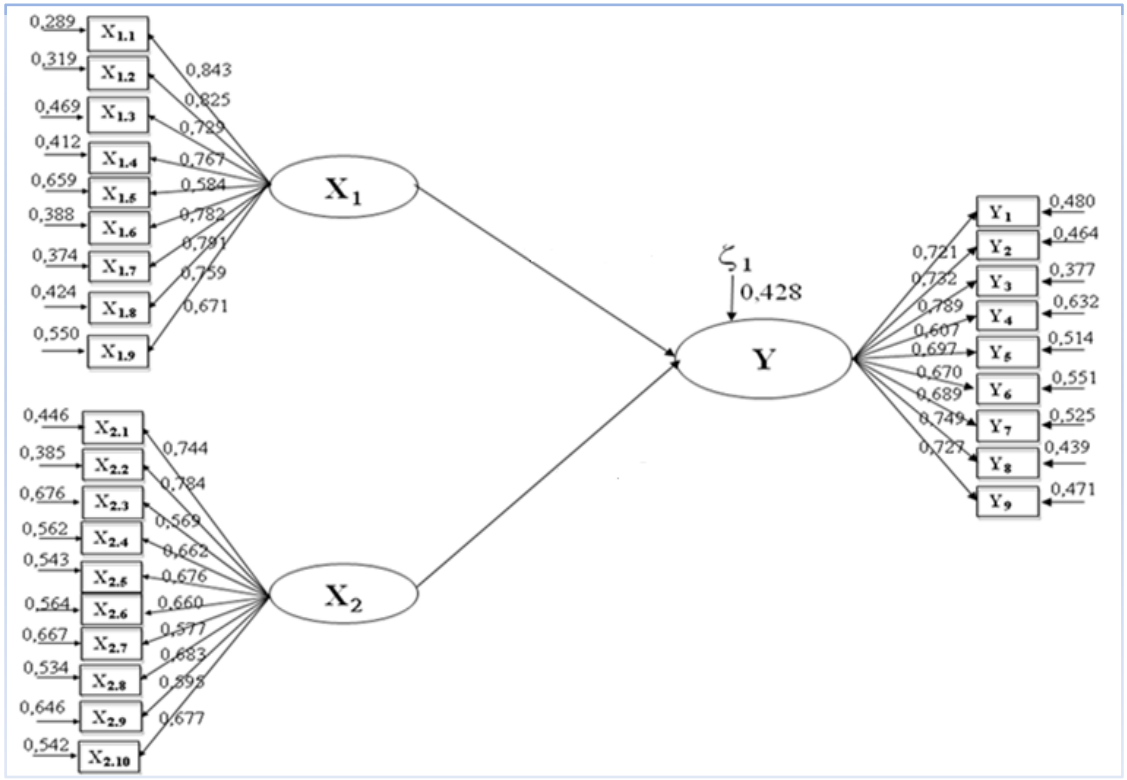

Figure 1 : Path diagram of structural equation model of the influence of participatory budgeting (X1) and procedural fairness (X2) to the managers' commitment (Y)

Structural equations for the first model is formulated as follows:

$$Y = 0.338X_1 + 0.565X_2 + \zeta_1$$

The influence coefficient of participatory budgeting (X_1) on the manager's commitment (Y) is 0.338 and a coefficient for procedural fairness (X_2) on the managers' commitment (Y) is 0.565. To examine the effect of variables which hypothesized partially using t test with the test criteria of α is 0.05, the limit values for significant test is 1.96. From these results, it can be seen the level of influence of participatory budgeting and procedural fairness to the manager's commitment either simultaneously or partially. The calculated effect consists of the direct, indirect and total effect. The magnitude of the direct, indirect and total effect of participatory budgeting and procedural fairness are presented in Table 4 below.

Table 4 : Effect on Level of Participatory Budgeting (X_1) and Procedural Fairness (X_2) on the Manager's Commitment (Y)

Variable	Formula	Effect(%)		
		Direct	Indirect	Total
Participatory Budgeting (X_1)	$\gamma^2_{YX_1}$ (0.338²x100 %)	11.42%		18.37%
	$\gamma_{YX_1} \times r_{X_1X_2} \times \gamma_{YX_2}$ (0.338 x 0.364 x 0.565) x 100 %)		6.95%	

© 2014 Global Journals Inc. (US)

Procedural Fairness (X_2)	$\gamma^2_{YX_2}$ (0.565²x100%)	31.92%		38.87%
	$\gamma_{YX_2} \times r_{X_1X_2} \times \gamma_{YX_1}$ (0.565 x 0.364 x 0.338) x100%)		6.95%	
Simultenous Effect of X_1 and X_2 on Y ($R^2_{Y.X_1X_2}$)				57.24%
Other Variables on Y (ζ_1)				42.76%

Source: Data Output SPSS

d) The Effect of Participatory Budgeting, Procedural Justice, Managers' Commitment on the Manager's Performance

The sub-structures analyzed in this study is the participatory, procedural fairness, manager's commitment affect either simultaneously or partially on the manager's performance. Path diagram of structural equation model of the influence of participatory budgeting (X_1) and procedural fairness (X_2), managers' commitment (X_3) on the manager's performance (Z) is presented in Figure 2 below.

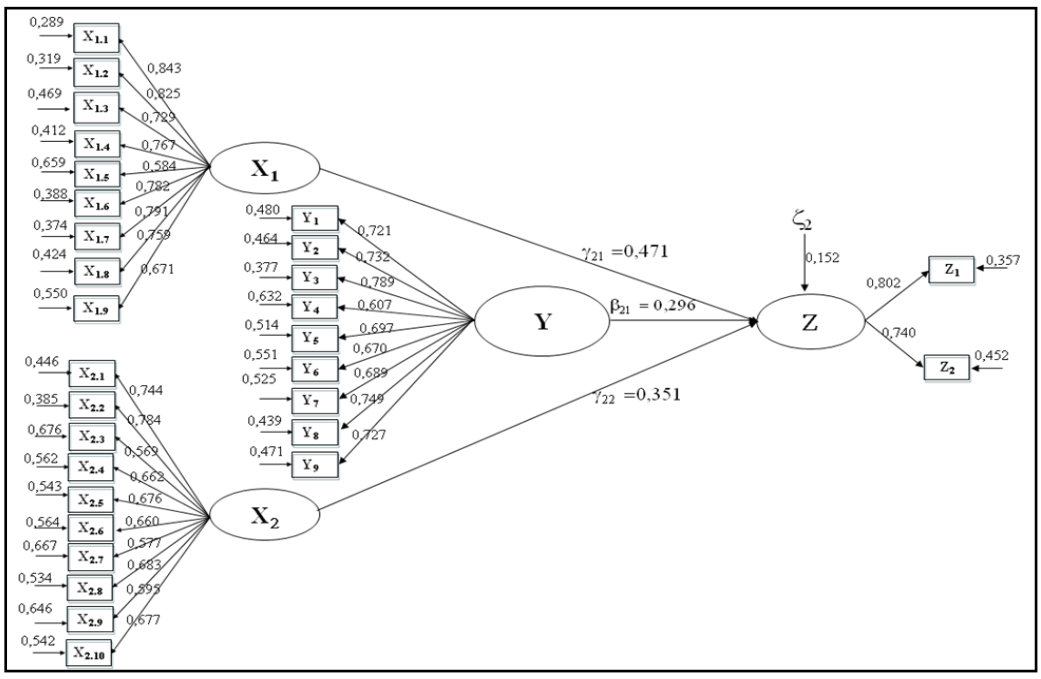

Figure 2 : Path diagram of structural equation model of the influence of participatory budgeting (X_1) and procedural fairness (X_2), managers' commitment (X_3) on the manager's performance (Z)

Structural equations for the first model is formulated as follows:

$$Z = 0.471X_1 + 0.351X_2 + 0.296Y + \zeta_2$$

The influence coefficient of participatory budgeting (X_1) on the manager's performance (Y) is 0.471, a coefficient for procedural fairness (X_2) on the managers' performance (Y) is 0.351 and and a coefficient for manager's commitment (X_3) on the managers' performance (Y) is 0.296. To examine the effect of variables which hypothesized partially using t test with the test criteria of α is 0.05, the limit values for significant test is 1.96. From these results, it can be seen the level of influence of participatory budgeting, procedural fairness and manager's commitment on the managers' performance either simultaneously or partially. The calculated effect consists of the direct, indirect and total effect. The magnitude of the direct, indirect and total effect is presented in Table 5 below.

© 2014 Global Journals Inc. (US)

Table 4 : Effect on Level of Participatory Budgeting (X_1), Procedural Fairness (X_2) and Manager's Commitment (Y) on the Manager's Performance (Z)

Variable	Formula	Effect (%)		
		Direct	Indirect	Total
Participatory Budgeting (X_1)	$\gamma^2_{ZX_1}$ (0.471^2) x 100 %	22.18%		35.79%
	$\gamma_{ZX_1} \times r_{X_1X_2} \times \gamma_{ZX_2}$ (0.471 x 0.364 x 0.351) x 100 %		6.02%	
	$\gamma_{ZX_1} \times r_{X_1Y} \times \gamma_{ZY}$ (0.471 x 0.544 x 0.296) x 100%		7.58%	
Procedural Fairness (X_2)	$\gamma^2_{ZX_2}$ (0.351^2) x 100%	12.32%		25.49%.
	$\gamma_{ZX_2} \times r_{X_1X_2} \times \gamma_{ZX_1}$ (0.351 x 0.364 x 0.471) x 100%		6.02%	
	$\gamma_{ZX_2} \times r_{X_2Y} \times \gamma_{ZY}$ (0.351 x 0.688 x 0.296) x 100 %		7.15%	
Manager's Commitment (Y)	β^2_{ZY} (0.296^2) x 100%	8.76%		23.49%
	$\beta_{ZY} \times r_{X_1Y} \times \gamma_{ZX_1}$ (0.296 x 0.544 x 0.471) x 100 %		7.58%	
	$\beta_{ZY} \times r_{X_2Y} \times \gamma_{ZX_2}$ (0.296 x 0.688 x 0.351) x 100%		7.15%	
Simultenous Effect of X_1 X_2 and Y on Z ($R^2_{Z.X_1X_2Y}$)				84.77%
Other Variables on Z (ζ_2)				15.23%

Source: Data Output SPSS

V. Discussion

a) The Simultaneous Effect of Participatory Budgeting and Procedural Justice to the Manager's Commitment

The results of calculations for the hypothesis of the effect of participatory budgeting (X_1) and procedural fairness (X_2) on the manager's commitment (Y) simultaneously can be seen in Table 6 below:

Table 6 : The Effect of Participatory Budgeting (X_1) and Procedural Fairness (X_2)

Variable	Path Coefficient	Direct Effect	Indirect Effect	Total
(X_1)	0.338	11.42%	6.95%	18.37%
(X_2)	0.565	31.92%	6.95%	38.87%
Total Effect Simultaneously				57.24%
Other Variable on Y				42.76%

Source: Data Output SPSS

The analysis showed that the participatory budgeting and procedural fairness affect simultaneously the manager's commitment. The influence of these two variables to the manager's commitment is positive at 57.24%. The results of this study indicate that the magnitude of the manager's commitment can be explained by the participatory budgeting and procedural fairness, while 42.76% is explained by other variables. If the magnitude of this effect is interpreted based on the level of relationship strength proposed by Guilford (1956: 145), the participatory budgeting and procedural fairness effects are still sufficient. Moreover, the effect of procedural fairness variable was higher than the variable of participatory budgeting. In this regard, the efforts to

© 2014 Global Journals Inc. (US)

increase manager's commitment is to provide wider opportunities to be involved in the process/decision-making procedures of the organization.

b) The Effect of Participatory Budgeting on Manager's Commitment

The participatory budgeting is hypothesized to have a significant influence on the manager's commitment. To prove this hypothesis, the testing based on the survey data can be seen in Table 7 below.

Table 8 : Significance Test on the Effect of Procedural Fairness (X_1) on the Manager's Commitment (Y)

Variable	Coefficient Effect	t	Critical t	Conclusion
Participatory budgeting	0.338	3.012	1.96	Positive and Significant Effect
Direct Effect = 11.42%		Indirect Effect = 6.95%		Total Effect = 18.37%

Source: Data Output SPSS

In Table 7 shows that the path coefficient of participatory budgeting to manager's commitment is 0.338. The positive relationship of participatory budgeting on manager's commitment means that the higher the degree of participatory budgeting, the higher the magnitude of the manager's commitment. Furthermore, the value of t-test path coefficients of participatory budgeting variable on manager's commitment is 3.012. It is also found that t-test value is greater than t-table (1.96), thus concluded that participatory budgeting significantly influence the managers' commitment. Meanwhile, the effect of participative budgeting on manager's commitment amounted to 18.37%. If the magnitude of this effect is interpreted based on the level of the strong relationship proposed by Guilford (1956: 145), then the effect of participatory budgeting on the manager's commitment is very low or weak. The results are consistent with the findings by Chong and Chong (2002), Wentzel (2002), Mulyasari and Sugiri (2004) states that participatory budgeting has a positive and significant effect on the manager's commitment. This a very weak effect of participatory budgeting due to the participation of branch manager in preparation of budget are not in line with expectations in carrying out the role as the manager of the company's organizational unit. In addition, although the branch managers are participated in designing the preparation of budget but when there is a change in budget, it often poorly communicated. This resulted because the branch managers face difficulty in achieving the targets on budget that have been set earlier, thus they are less committed to the organization. To increase the manager's commitment is by providing a wider role in the preparation of the budget. In other words, the pawnshop particularly those in regional offices need to improve the application of participative management whereby a wider role is given, means it required to increase the responsibilities in achieving the targets on the budget.

c) The Effect of Procedural Fairness on Manager's Commitment

The procedural fairness is hypothesized to have a significant influence on the manager's commitment. To prove this hypothesis, the testing based on the survey data can be seen in Table 8 below:

Table 8 : Significance Test on the Effect of Procedural Fairness (X_2) on the Manager's Commitment (Y)

Variable	Coefficient Effect	t	Critical t	Conclusion
Procedural Fairness	0.565	4.624	1.96	Positive and significant effect
Direct Effect = 31.92%		Indirect Effect = 6.95%		Total Effect = 38.87%

Source: Data Output SPSS

In Table 8 shows that the path coefficient of procedural fairness to manager's commitment is 0.565. The positive relationship of procedural fairness on manager's commitment means that the higher the degree of procedural fairness, the higher the magnitude of the manager's commitment. Furthermore, the value of t-test path coefficients of procedural fairness variable on manager's commitment is 4.624. It is also found that t-test value is greater than t-table (1.96), thus concluded that procedural fairness significantly influence the managers' commitment. Meanwhile, the effect of procedural fairness on manager's commitment amounted to 38.87%. If the magnitude of this effect is interpreted based on the level of the strong relationship

© 2014 Global Journals Inc. (US)

proposed by Guilford (1956: 145), then the effect of procedural fairness on the manager's commitment is low or weak. The results are consistent with the findings by Early and Lind (1987), Lin et al. (1990), Wentzel (2002), Mulyasari and Sugiri (2004), Yusfah Ningrum and Ghozali (2005), which states that procedural fairness has a positive and significant effect on the manager's commitment.

This a weak effect of procedural fairness due to a variety of decision-making procedures such as the budget preparation and execution procedures, evaluation procedure of budget execution and award procedures that are often done not in timely. At the pawnshop, a variety of decision-making procedures are well formulated but the implementation is often done too late. For those pawnshop's branch offices that are geographically dispersed so widely, this delay makes the branch manager cannot prepare and implement the budget properly and the corrective action is often too late when there is a deviation in the responsibility. Similarly with the provision of various forms of awards that been done in later time will not provide a meaningful value. Thus the timeliness is an important factor that must be taken into consideration in formulating and implementing decisions.

d) The Simultenous Effect of Participatory Budgeting and Procedural Fairness and Manager's Commitment on Manager's Performance

The hypothesis result of simultenous effect of participatory budgeting, procedural fairness, manager's commitment on manager's performance can be seen in Table 9 below:

Table 9 : The Simultaneous Effect of Participatory Budgeting (X_1) and Procedural Fairness (X_2) and Manager's Commitment (Y) to Manager's Performance (Z)

Variable	Coefficient Effect	Direct Effect	Indirect Effect	Total
(X_1)	0.471	22.18%	13.61%	35.79%
(X_2)	0.351	12.32%	13.17%	25.49%
(Y)	0.296	8.76%	14.73%	23.49%
Total Effect Simultaneously				84.77%
Other Variable on Z				15.23%

Source: Data Output SPSS

The analysis showed that the participatory budgeting, procedural fairness and manager's commitment affect simultaneously the manager's performance. The influence of these three variables to the manager's performance is positive at 84.77%. The results of this study indicate that the magnitude of the manager's performance can be explained by the participatory budgeting, procedural fairness and manager's commitment, while 15.23% is explained by other variables. If the magnitude of this effect is interpreted based on the level of relationship strength proposed by Guilford (1956: 145), the participatory budgeting, procedural fairness and manager's commitment are having strong effect. Moreover, the effect of participatory budgeting variable was greater than the variables of procedural fairness and manager's commitment. In this regard, the efforts to increase manager's performance is to increase the participation of managers in the preparation of the budget. Increased in participation is very important with consideration that they are the most knowledgeable both the potential and weaknesses of the organization unit, so that they will develop a more realistic plan in accordance with the conditions and the ability of the organization unit.

e) The Effect of Participatory Budgeting on Manager's Performance

The participatory budgeting is hypothesized to have a significant influence on the manager's performance. To prove this hypothesis, the testing based on the survey data can be seen in Table 10 below:

Table 10 : Significance Test on the Effect of Participatory Budgeting (X_1) on Manager's Performance (Z)

Variable	Coefficient Effect	t	Critical t	Conclusion
Participatory Budgeting	0.471	3.564	1.96	Positive and significant effect
Direct Effect = 22.18%		Indirect Effect = 13.61%		Total Effect = 35.79%

Source: Data Output SPSS

In Table 10 shows that the path coefficient of participatory budgeting to manager's performance is 0.471. The positive relationship of participatory budgeting on manager's performance means that the

© 2014 Global Journals Inc. (US)

higher the degree of participatory budgeting, the higher the magnitude of the manager's performance. Furthermore, the value of t-test path coefficients of participatory budgeting variable on manager's performance is 3.564. It is also found that t-test value is greater than t-table (1.96), thus concluded that participatory budgeting significantly influence the managers' performance. Meanwhile, the effect of participatory budgeting on manager's performance amounted to 35.79%. If the magnitude of this effect is interpreted based on the level of the strong relationship proposed by Guilford (1956: 145), then the effect of participatory budgeting on the manager's performance is low or weak. The results are consistent with the findings by Shields et al. (2000), Chong and Chong (2002), Wentzel (2002) which states that participatory budgeting has a positive and significant effect on the manager's performance. This a weak effect of participatory budgeting describe the awareness of branch managers that achievement is an obligation and thus the related activities should always be done, so as not to affect the level of the authority given by their superior manager in the preparation of the budget.

f) The Effect of Procedural Fairness on Manager's Performance

The procedural fairness is hypothesized to have a significant influence on the manager's performance. To prove this hypothesis, the testing based on the survey data can be seen in Table 11 below:

Table 11 : Significance Test on the Effect of Procedural Fairness (X_2) on Manager's Performance (Z)

Variable	Coefficient Effect	t	Critical t	Conclusion
Procedural Fairness	0.351	3.136	1.96	Positive and significant effect
Direct Effect = 12.32%		Indirect Effect = 13.17%		Total Effect = 25.49%

Source: Data Output SPSS

In Table 10 shows that the path coefficient of procedural fairness to manager's performance is 0.351. The positive relationship of procedural fairness on manager's performance means that the higher the degree of participatory budgeting, the higher the magnitude of the manager's performance. Furthermore, the value of t-test path coefficients of procedural fairness variable on manager's performance is 3.136. It is also found that t-test value is greater than t-table (1.96), thus concluded that procedural fairness significantly influence the managers' performance. Meanwhile, the effect of procedural fairness on manager's performance amounted to 25.49%. If the magnitude of this effect is interpreted based on the level of the strong relationship proposed by Guilford (1956: 145), then the effect of procedural fairness on the manager's performance is low or weak. The results are consistent with the findings by Libby (1999), Wentzel (2002), Mulyasari and Sugiri (2004) which states that procedural fairness has a positive and significant effect on the manager's performance.

This a weak effect of procedural fairness due to a tendency of branch office managers that they feel less given the opportunity to express their opinions in the decision-making process of the organization, so their drive to excel also low. Thus, the improvement of manager's performance can be done by providing a greater opportunity in organizational decision-making procedure. Increases the magnitude of the manager's participation in decision-making enabling them to determine the overall decision-making process of the organization, so as to produce the information relevant to the job. The job relevant inforamation is related to the extent of manager's assessment ability to receive the information that can be used in effective decision making as well as to evaluate the alternative decision. This also can improve the performance because it provides more accurate predictions on the environment and a more effective choice for the best action.

g) The Effect of Manager's Commitment on Manager's Performance

The manager's commitment is hypothesized to have a significant influence on the manager's performance. To prove this hypothesis, the testing based on the survey data can be seen in Table 12 below:

Table 12 : Significance Test on the Effect of Manager's Commitment (Y) on Manager's Performance (Z)

Variable	Coefficient Effect	t	Critical t	Conclusion
Commitment	0.296	2.450	1.96	Positive and significant effect
Direct Effect = 8.76%		Indirect Effect = 14.73%		Total Effect = 23.49%

Source: Data Output SPSS

© 2014 Global Journals Inc. (US)

In Table 12 shows that the path coefficient of commitment to manager's performance is 0.296. The positive relationship of commitment on manager's performance means that the higher the degree of commitment, the higher the magnitude of the manager's performance. Furthermore, the value of t-test path coefficients of commitment variable on manager's performance is 2.450. It is also found that t-test value is greater than t-table (1.96), thus concluded that commitment significantly influence the managers' performance. Meanwhile, the effect of commitment on manager's performance amounted to 23.49%. If the magnitude of this effect is interpreted based on the level of the strong relationship proposed by Guilford (1956: 145), then the effect of commitment on the manager's performance is low or weak. The commitment is closely related to the manager's performance. Accordingly, the higher the commitment of managers, it will be the higher the performance. Results of the study show that the effect of the manager's commitment to performance is still low which due to limitation on the given budget, so their performance become low. Accordingly, the upper-level managers attempt to increase the lower level manager's commitment and suggested to continue fulfilling the expectations that will foster the satisfaction or pride in themselves. The results are consistent with research conducted by Murray (1990), Chong and Chong (2002), Wentzel (2002), Yusfah Ningrum and Ghozali(2005) which states the manager's commitment has a positive and significant effect to performance.

Given the manager's commitment is an intervening variable, efforts to increase the commitment is also influenced by the interaction of the previous independent variables, namely participatory budgeting and procedural fairness. Thus, efforts to increase the manager's commitment on the goals of the budget can be done by increasing their participation in the preparation of the budget. Through this participation, the managers will have high motivation to achieve its stated objectives. Other efforts that can be done is to give a wider opportunity to branch manager in the decision making process of the organization.

VI. Conclusion

Based on the results and discussion, the research conclusions can be stated as follows:

1. Participatory budgeting and procedural fairness simultaneously have a significant and positive effect to the manager's commitment.
2. Participatory budgeting has a significant positive effect on managers' commitment.
3. Procedural fairness has a significant and positive effect on managers' commitment.
4. Participatory budgeting and procedural fairness and commitment simultaneously have a significant and positive effect on the manager's performance.
5. Participatory budgeting has a significant and positive effect on the manager's performance.
6. Procedural fairness has a significant and positive effect on the manager's performance.
7. Commitment has a significant and positive effect on the manager's performance.

References Références Referencias

1. Anthony, N. R., & Vijay, G. (2003). *Management Control System*. Irwin-McGraw-Hill.
2. Binberg, J., Shields, M., & Mc Innes. (1986). Budgetary Participation, Motivation and Managerial Performance. *The Accounting Review*, 9(4), 587-600.
3. Cropanzano, R., & Folger, R. (1991). *Procedural Justice and Worker Motivation, In Motivation and Work Behavior*. Edited by R.M. Staw, & L.W. Porter. New York, NY: McGraw-Hill.
4. Chong, Vincent, K., & Ming, C.K. (2002). Budget Goal Commitment and Informational Effects of Budget Participation on Performance: Astructural Equation Modeling Approach. *Behavioral Research in Accounting*, 14.
5. Folger, R.D., Rosenfeld & Robinson, T. (1983). Relative Deprivation and Procedural Justification. *Jounal of Personality and Social Psychology*, 45, 268-273.
6. Ferdinand, A. (2000). *Structural Equation Modeling Dalam Penelitian Manajemen*. Aplikasi Model-model Rumit Dalam Penelitian Untuk Tesis S-2 & Disertasi S-3 (Application of Research Models). Badan Penerbit Universitas Diponegoro, Semarang.
7. Govindarajan, V. (1986). Impact of Participation in Budgetary Process on. Attitudes and Performance: Universalistic and Contigency Perspectives. *Decisions Sciences*, 196-516.
8. Guilford, J.P. (1956). *Psychometric Method*. New York: Mc-Graw - Hill Book Company Inc.
9. Hollebeck, John R., Charles R., Williams, & Howard, J. K. (1989). An Empirical Examination of The Antercedents of Commitment to Difficult Goals. *Journal of Applied Psychology*, 18-23.
10. Hansen, Don R., & Maryanne M. Mowen, (2005). *Management Accounting*, 7th USA, International, Thomson Publishing.
11. Kennis, Izzetin, 1979. Effect of Budgetary Goal Characteristic on Managerial Attitudes and Performance, *The Accounting Review*, Vol 14 (4) pp 707-721.
12. Kreitner, R., & Angelo K. (2000). *Organizational Behavior*. Mc Graw-Hill Companies, New York.
13. Libby, T. (1999). The Influence of Voice and Explanation on Performance in A Participative Budgeting Setting. *Accounting, Organizations and Society*, 24, 125-137.
14. Lindquist, T. M. (1995). Fairness as Antecedent to Participative Budgeting: Examining The Effects of

© 2014 Global Journals Inc. (US)

Distrutive Justice, Procedural Justice and Referent Cognition on Satisfaction and Performance. *Journal of Management Accounting Research*, 7, 122-142.
15. Maryanto (2004). Perum Pegadaian: Selayang Pandang Sejarah Pegadaian.
16. Milani, K. (1975). The Relationship of Participation in Budget Setting to Industrial Supervisor Performance and Attitude: A Field Study. *The Accounting Review*.
17. Murray, D. (1990). The Performance Effect of Participative Budgeting: An Integration of Intervening and Moderating Variables. *Behavioral Reseach in Accounting,* 104-123.
18. Mulyasari, W., & Sugiri, S. (2005). Keadilan, Komitmen Pada Tujuan, dan Job Relevant Information dalam Penganggaran Partisipatif. *Jurnal Riset Akuntansi Indonesia*, 8(3), 310-324.
19. Otley, D. (1978). Budget Use and Managerial Performance. *Journal Accounting Research*, 16, 122-149.
20. Shields, J.F. & Shields (1998). Antecendents of Participative Budgeting. *Accounting, Organization and Society*, 49-76.
21. Shields, M. D., & Young (1993). Antecedents and Consequences of Participative Budgeting: Evidence on The Effects of Asymmetrical Information. *Journal of Management Accounting Research*, 265-280.
22. Shields, M. D., Deng, Johny, F., & Kato, Y. (2000). The Design and Effects of Control Systems: Test of Direct-and Indirect-Effects Models. *Accounting Organizations and Society*, 25, 185-202.
23. Siegel, G., & Helena Ramanauskas-Marconi (1989). *Behavioral Accounting*. Cincinatti: South Western Publications Company.
24. Singarimbun, M., & Effendi, S. (1995). *Metode Penelitian Survay*. Edisi Revisi, LP3ES, Jakarta.
25. Widia, A. (2012). Pengaruh Lingkungan Bisnis terhadap Informasi Akuntansi Manajemen, dan Penganggaran dampaknya terhadap Kinerja Perusahaan. *Trikonomika,* Fakultas Ekonomi Universitas Pasundan, Terakreditasi Dikti Nomor 110/DIKTI/Kep/ 2009, 11, 160-175.
26. Wentzel, K. (2002). The Influence of Fairness Perceptions and Goal Commitment on Managers Performance in A Budget Setting. *Behavioral Research in Accounting*, 14, 247-271.
27. Yusfaningrum, Kusnasriyati & Ghozali, I. (2005). *Analisis Pengaruh Partisipasi Anggaran Terhadap Kinerja Manajerial Melalui Komitmen Tujuan Anggaran dan Job Relevant Information Sebagai Variabel Intervening*. Kumpulan Materi Simposiun Nasional Akuntansi, Solo, 15-16 September 2005, 656-666.

© 2014 Global Journals Inc. (US)

This page is intentionally left blank

© 2014 Global Journals Inc. (US)

Global Journal of Management and Business Research: D
Accounting and Auditing
Volume 14 Issue 5 Version 1.0 Year 2014
Type: Double Blind Peer Reviewed International Research Journal
Publisher: Global Journals Inc. (USA)
Online ISSN: 2249-4588 & Print ISSN: 0975-5853

Disclosure of Information in Audit Reports

By FláviaVerônica Silva Jacques & Clea Beatriz Macagnan

Universidade Federal do Rio Grande (FURG), Brazil

Abstract- This study aimed to determine if the level of information included in audit reports was related to the average stock value of companies as listed in the Brazilian capital market. Of 255 companies, 44 financial entities were excluded because they operate in regulatory and competitive environments that are different from the other studied companies. The selected companies had at least one audit report over a 5-year period (2005 to 2009), which resulted in a final sample of 33 companies and a total of 165 observations. The study first analyzed the information content in the audit reports, and statistical analyses were then performed to compare the data. The results showed that the disclosure of accounting practices has a positive explanatory effect on the average share price variance.

Keywords: disclosure, audit, audit reports, agency theory.

GJMBR - D Classification : JEL Code : M49

DISCLOSUREOFINFORMATIONINAUDITREPORTS

Strictly as per the compliance and regulations of:

© 2014. FláviaVerônica Silva Jacques & Clea Beatriz Macagnan. This is a research/review paper, distributed under the terms of the Creative Commons Attribution-Noncommercial 3.0 Unported License http://creativecommons.org/licenses/by-nc/3.0/), permitting all non-commercial use, distribution, and reproduction in any medium, provided the original work is properly cited.

Disclosure of Information in Audit Reports

FláviaVerônica Silva Jacques α & Clea Beatriz Macagnan σ

Abstract- This study aimed to determine if the level of information included in audit reports was related to the average stock value of companies as listed in the Brazilian capital market. Of 255 companies, 44 financial entities were excluded because they operate in regulatory and competitive environments that are different from the other studied companies. The selected companies had at least one audit report over a 5-year period (2005 to 2009), which resulted in a final sample of 33 companies and a total of 165 observations. The study first analyzed the information content in the audit reports, and statistical analyses were then performed to compare the data. The results showed that the disclosure of accounting practices has a positive explanatory effect on the average share price variance.

Keywords: disclosure, audit, audit reports, agency theory.

I. Introduction

To ensure the quality of information, quality standards are required by regulators in the Brazilian market, primarily via the disclosure of companies' financial statements. To ensure that the information reported by financial statements is truthful, external auditor examinations are conducted. The independent audit of the financial statements provides users with an assessment of the information disclosed by the company, informs their investment decisions, and encourages transparency among the company management (Jensen; Meckling 1976; Chow 1982). In this context, the audit report becomes a source of information that can be used by stakeholders in their decision-making processes. The audit report is also a formal, legal, and unbiased report that validates and ensures the regularity and reliability of the financial statements produced and disclosed by the companies (Araújo 2003).

Therefore, the present study seeks to answer the following question: is a company's variance of the average share price as listed in the Brazilian capital market related to the level of information disclosed in audit reports? The motivation for this research originates from the lack of studies on Brazil's capital market related to disclosure using an independent audit report as a source for analyses.

Author α: Professorat the Federal University of Rio Grande (FURG), Country: Brazil. e-mail: flaviaiceac@yahoo.com.br
Author σ: Professor at the University UNISINOS, Country: Brazil. e-mail: cleabeatrizm@gmail.com

II. Brazil's Capital Market

Since the 1990s and due to the economic globalization process, there has been an increase in foreign investors in Brazil's capital market. Additionally, several Brazilian companies have entered foreign markets, listing their shares on foreign stock exchanges, such as the New York Stock Exchange, as American Depositary Receipts (ADRs). These changes have forced Brazilian companies to improve their management practices, including the development of corporate governance.

To encourage better corporate governance practices in the Brazilian market and boost investor confidence, some institutional and governmental initiatives have also been implemented. Notably, corporate law No. 6.404/76, which instituted modern rules to govern publicly listed companies, and law No. 6.385/76, which created the Securities Commission (Comissão de Valores Mobiliários – CVM), were implemented. The creation of the New Market and of Levels 1 and 2 of Corporate Governance by the São Paulo Stock Exchange (Bovespa) represents more milestones in this process.

The CVM operates on matters related to Brazilian corporate law (6.404/76) and is empowered to discipline, regulate, and monitor the activities of the several members of Brazil's securities market: the publicly listed companies, the financial intermediaries, and the investors. Law 6.404/76 (amended by Law 11.638/07) stipulates that at the end of each fiscal year, each company's board will draft financial statements that should clearly express the company's net worth and the changes that occurred in that fiscal year. These statements should be complemented with explanatory notes and the other analytical tools necessary for the clarification of assets and earnings for that period. In addition, "the financial statements of publicly listed companies will follow the regulations implemented by the CVM and will be audited by independent auditors" (art. 177 § 3rd - amendment introduced by Law 11.941/09).

Through the preparation of financial statements, it is possible to obtain information regarding an entity's financial position, assets, earnings, and financial flow, which is useful for a wide range of users to make decisions. These statements should show the management of resources entrusted to the administration, according to CVM resolution No. 488/2005. Disclosure of corporate information in the

© 2014 Global Journals Inc. (US)

capital market, whether voluntary or compulsory, enables the reduction of informational asymmetry between the parties and the economic agents involved.

III. Informational Asymmetry in Corporate Relations and Agency Theory Assumptions

Contractual relationships may be considered the essence of a company (Jensen and Meckling 1976). These relationships are made not only with investors, but also with the employees, customers, and suppliers, among other economic agents. The conditions established in these contracts form the basis of the organization (Alchian; Demsetz 1972). Not all of the economic agents possess the same amount of information regarding the company. The uneven access to information gives rise to a situation of information asymmetry between the economic agents (Jensen and Meckling 1976). Considering the capital market environment, the problem lies in the fact that the agent (management) has insights that are hardly observable by the principal (shareholder/investor).

The different levels of information that exist between the economic agents create opportunities and conditions that would limit the market's efficiency (Arrow, 1963). In this context, the informational asymmetry establishes implications for adverse selection (ex ante opportunism) and moral hazard (ex post opportunism) (Macagnan, 2005). The problem of adverse selection occurs before the signing of a contract, in which one of the parties holds more information on the transaction than the other party (Akerlof 1970; Rothschild; Stiglitz 1976; Mishkin 1991; Kreps 1994; Cutler and Zeckhauser 1997). The problem of moral hazard would be an opportunist post-contract consequence related to the difficulty in observing whether the actions of a particular party are aligned with the agreement (Milgron and Roberts 1992). This type of situation could lead to economic inefficiency in the capital market (Akerlof 1970).

Beginning from the assumption that all economic activity can be reduced to a series of bilateral contracts, which can be made or broken at any time by either party (Jensen; Meckling 1976), the problems of moral hazard and adverse selection could generate costs. These costs include the following: the principal monitoring of the agent; the agent demonstrating that their behavior is line with the behavior desired by the principal; and insurance and residual losses (Jensen; Meckling 1976). To minimize these problems, the agency theory proposes the disclosure of information, as well as the hiring of external auditors, which could improve market transactions (Verrecchia 1999; Healy and Palepu 2001). The agency theory stresses the significance of information disclosure as a way to mitigate both the informational asymmetry between the principal and the agent, as well as the problems with the high costs of monitoring the agents' actions to ensure that they comply with institutional standards. Corporate disclosure becomes essential in ameliorating the problems related to moral hazard and adverse selection derived from informational asymmetry.

IV. Information Disclosure to the Market

The Financial Accounting Standards Board (FASB, 2008) considers relevant information to be information that can "make a difference" in a future decision. In addition, relevant information should allow users to make predictions concerning the outcome of observed events and confirm or correct a previous expectation, which is called the predictive value and feedback value of information. Accordingly, the disclosure of financial, economic, and management information through statements could serve as a decision-making aid, helping to set goals for attracting new resources and risk management, thereby increasing investor confidence. This confidence would raise the likelihood of investors to purchase company shares. Risk reduction also would generate better stock pricing, which in turn encourages new capital openings and strengthens the stock market (Levitt 1998). In particular, the disclosure of information through audited financial statements (external and independent audit) could be regarded as a means of reducing agency costs (Jensen; Meckling 1976; Chow 1982).

The studies of Ball and Brown (1968), Chow and Wong-Boren (1987), Cooke (1989a, 1989b), Raffournier (1995), Patton and Zelenka (1997), Owusu-Ansah (1997), Leventis and Weetman (2000), Piacentini (2004), and Zhang (2008) indicated the significance of disclosure in the market. Furthermore, Firth (1979) and Wallace, Naser, and Mora (1994) noted that audit firms have an influence on the content shown in companies' annual reports. The larger and more recognized the audit firm, the greater this influence. Studies by DeAngelo (1981) and Inchausti (1997) reported that the large audit firms have incentives to provide a higher level of auditing quality through information disclosure in their reports and also that they risk losing their prestige if they are linked to clients with poor disclosure practices. Craswell and Taylor (1992) suggested that the audit firm choice is likely to be associated with the decision to disclose more or less information.

V. Independent Audit in the Brazilian Context

The examination of financial statements by external auditors promotes the disclosure of information that is sufficient to guide users' decisions (Jensen and Meckling 1976; Chow 1982 and Healy and Palepu 2001). The hiring of external auditors is a way to signal

© 2014 Global Journals Inc. (US)

the good practices of the company's management to foreign investors (Jensen and Meckling 1976). The hiring of these services originates from a market demand to increase the credibility of financial reports (Healy and Palepu 2001).

Regarding the Brazilian market, the goal of an accounting audit is to increase the users' degree of confidence in the financial statements. This process is achieved by an audit report stating that statements meet the regulatory requirements (NBC TA 200 CFC Resolution N. 1.203/09). The audit report would be the end product of the auditor, a formal means of communication that provides information to stakeholders.

The Brazilian Accounting Standard NBC T 11/05 that was promulgated by the Federal Accounting Council (Conselho Federal de Contabilidade – CFC, 2005) states the form and content guidelines for reports issued on the financial statements of organizations by independent auditors and clarifies the main components that must be included. When issuing an opinion, the auditor assumes technical and professional responsibility for the report that will then be directed to shareholders, investors or partners, and the board of directors, or the company equivalent. In certain circumstances, the audit report will be distributed to contracted service providers.

Depending on the nature of the opinions expressed in the audit report, the report is classified as one of the following: a (1) report without caveats; (2) report with caveats; (3) adverse report; and (4) report omitting opinion. In any of the referred reports, the auditor should identify the following information: (a) the financial statements on which the opinion is based; (b) the name of the entity and the dates and periods reported; and (c) if the work is performed by an audit firm, the auditor should indicate the name and the number under which the firm is registered with the Regional Council of Accountancy. The independent audit report essentially consists of 3 parts: (1) identifying the financial statements and defining the responsibilities of the directors and auditors; (2) describing the extent of the work; and (3) expressing the auditor's opinion on the financial statements. Finally, the audit report must be dated and signed by the accountant responsible for the work (noting their registration number with the Regional Council of Accountancy), and the date should correspond to the date of the audit report closure.

VI. Methodological Procedures

The present study is based on the premise that the disclosure of information to the market through audit reports is considered to be a form of informing stakeholders on the legal, financial, and economic situation of the organization, thereby enabling stakeholders to support a company's future plans by the buying or selling stocks. By examining the variation of prices before or after the report publication, it is possible to determine if the values reflect the type and the degree of information disclosed in the market or if the report does not reflect relevant information. Therefore, the research hypothesis presented in this study is the following:

H1: the information disclosed in the audit report is related to the variation in the average value of company shares.

Therefore, to model estimates, we employed a multiple linear regression model using the ordinary least squares (OLS) method and panel data. The model proposed and tested in the present study was exploratory because it has not been used in similar studies. The econometric model is specified below:

$$MVV_{it} = \beta 0 + \beta 1ED_{it} + \beta 2EAP_{it} + \beta 3EDE_{it} + \beta 4TA_{it} + \beta 5NI_{it} + \beta 6NP_{it} + \beta 7Eq_{it} + \beta 8Ind_{it} + \beta 9Beta_{it} + \beta 10GL_{it} + \beta 11EX_R_{it} + \beta 12GDP_{it} + \beta 13Cash\text{-}Yield_{it} + \beta 14\ SECTOR_{it} + \varepsilon_{it} \quad (1)$$

The dependent variable (MVVit) is the variance of the mean value of the companies' share price. For this variable, the daily share prices of the companies were obtained the official website of the Brazilian stock exchange 60 days before and 60 days after the publication of the audit report. With these daily stock prices, it was possible to obtain the average value for the periods before and after the report release. Preferred and ordinary shares were considered together because their variations were quite similar.

The choice of the period for the event study was based on the audit report publication date for each company's earnings statement. The magnitude of the event was 120 days, beginning 60 days (-60) before the event (0) and ending 60 days (+60) after the event. The days considered when calculating the arithmetic mean were only those days that trading occurred in the Bovespa.

The formula used to calculate the arithmetic mean of the values is as follows:

$$Xa = \frac{\sum Sp(-60)}{N}, \quad (2)$$

$$Xp = \frac{\sum Sp(+60)}{N}, \quad (3)$$

where Xa is the mean share price prior to the event, Xp represents the mean share price after the event, ∑Sp(-60) is the sum of the values of the daily share prices in the period of 60 days immediately before publication of the audit report, ∑Sp(+60) represents the sum of the values of the daily share prices in the period of 60 days immediately after publication of the audit report, and N is the number of days in which the shares were traded within the period of 60 days.

© 2014 Global Journals Inc. (US)

Once the means for companies were calculated for the years analyzed, the next step was to verify the variance in the mean share prices (increase or decrease) after the publication of audit reports. To do so, we used the following formula:

$$MVV=\sum(Xp(ON)+Xp(PN)) - \sum(Xa(ON)+Xa(PN)), \quad (4)$$

where MVV is the mean value variance, ∑(Xp(ON)+Xp(PN)) represents the sum of ON and PN share mean value after the event, and ∑(Xa(ON)+Xa(PN)) is the sum of ON and PN share mean value before the event.

The explanatory variables, β1EDit (discontinuity indicators), β2EAPit (accounting practices indicators), and β3EDEit (indicators of other events), were developed as described below. First, analyses of the audit report contents were performed to identify the disclosed information and create the respective indicators. To construct these indicators, the primary aspects described by the auditors in their caveats were extracted, as well as all of the content described in the report, including paragraphs on relevant information presented in the series of caveats. The decision to include these paragraphs was made because the audit report should be analyzed in its entirety and in view of the (impartial) informational content presented because of the significance given to that document by the legislation (Law 6.404/76 and subsequent amendments), regulators (CVM and CFC), and the capital market, which requires it in their own regulations. The starting point for the construction of indicators was the NBC T 11.10 - CFC Resolution N. 1.037/05 (CFC 2005). This resolution dictates the main aspects that are to be noted by the auditors regarding evidence of the audited company's operating discontinuity.

From the content analyses of the audit reports, 37 new indicators were created. In conducting the research, the 19 NBC T 11.10 operational discontinuity indicators and the 37 indicators created were considered together for a total of 55 indicators. After defining the indicators, categories of indicators were created that allowed for the level of information disclosure to be measured. These indexes are illustrated in Figure 1.

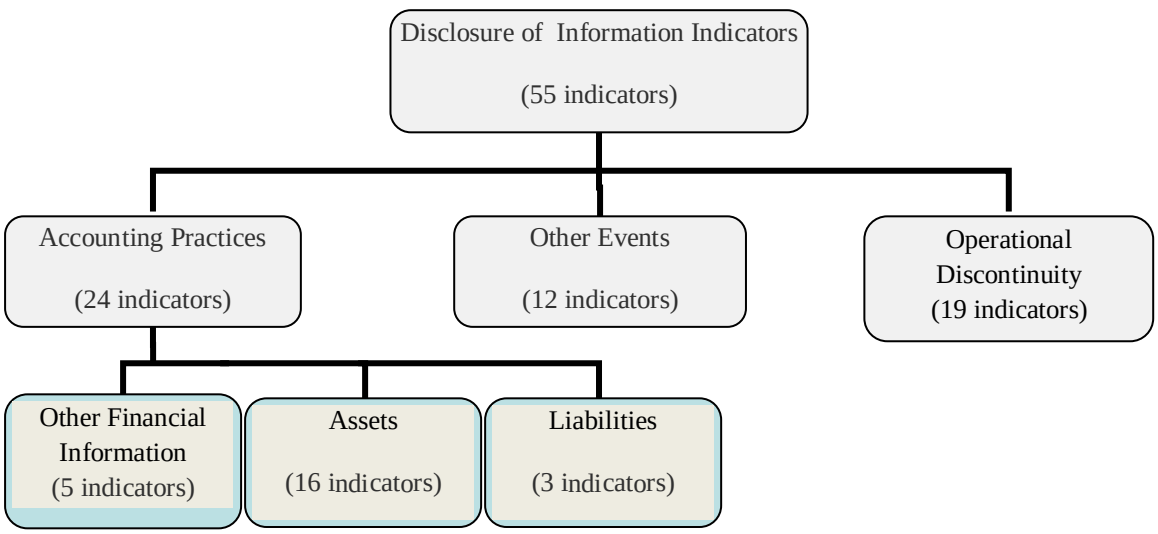

Figure 1 : Information disclosure indicator categories

In the category "indicators of accounting practices", we aimed to address the main information disclosed in accounting practices, such as evaluations, bookkeeping, provisions, adjustments, reclassifications, divergences, etc. This category covers information on the assets and liabilities of the companies, as well as on the financial statements and the limitations of audit procedures. There are 16 indicators of information disclosure on the current or non-current assets and 3 indicators of disclosure related to the company's current or non-current liabilities. In addition, a sub-category, "other financial information", was created with 5 indicators. Another category was created to disclose a company's strategic and administrative information and relevant facts that could somehow impact the current or future earning; this category was "disclosure indicators - other events" and included 12 indicators. After the construction of the indicators, disclosure indices were calculated for each of the 33 companies. The 55 analytical indicators are presented in Appendices I and II.

A set of categories representing the indicators was created to measure the level of information disclosure. These categories are represented with the indexes calculated for each company using the following formula:

$$I_j = \frac{\sum_{i=1}^{n} x_{ij}}{n_j}$$

where nj is the number of indicators expected for each company, j is the sub-index of each company,

© 2014 Global Journals Inc. (US)

and i is the number of indicators. If the indicator Xij is disclosed, it assumes a value of 1; otherwise, the value is 0.

Control variables were inserted in the model and were considered to be indicators capable of aiding investment decisions. Therefore, these variables can influence the stock value (increase or decrease). The **control variables** are the total assets ($\beta 4TA_{it}$), net income ($\beta 5NI_{it}$), net profit ($\beta 6NP_{it}$), equity ($\beta 7Eq_{it}$), indebtedness ($\beta 8Ind_{it}$), beta ($\beta 9Beta_{it}$), general liquidity ($\beta 10GL_{it}$), and cash-yield per share ($\beta 13CashYield_{it}$). These values were obtained from the Economática database. The economic control variables were the exchange rate ($\beta 11EX_R_{it}$) and the gross domestic product-GDP growth rate ($\beta 12GDP_{it}$), obtained from the Brazilian Institute of Economics (Instituto Brasileiro de Economia (IBRE)) of the Getúlio Vargas Foundation website. Established in 1951, the IBRE focuses on the production and dissemination of macroeconomic statistics and applied economic research and pioneered calculating the Brazilian GDP. The company's sector of activity ($\beta 14SECTOR_{it}$) was also included as a control variable.

The study population was composed of 255 publicly traded companies with shares traded on Bovespa's traditional market. Of this population, 44 financial entities were excluded because they operate in regulatory and competitive environments that are different from the other companies. Of the remaining non-financial companies, 211 were selected because they disclosed at least one report with caveats over a period of 5 years (2005 to 2009), which resulted in a final sample of 33 companies and a total of 165 observations.

VII. Research Results

The research results are presented below using two methods of analyses: (1) descriptive and correlation analyses and (2) linear regression.

VIII. Descriptive Analyses and Correlation Analyses

Table 1 reports the descriptive analyses results of the explanatory and control variables in the econometric model. The means of indicators are based on the content analyses of the company's audit reports, XD (indicators of operational discontinuity), XDE (indicators of other events), and XPC (indicators of accounting practices), and also of the control variables, TA, beta, cash-yield, Ind, GL, NP, GDP, Eq, NI, and EXR.

Table 1 : Descriptive analyses of the dependent variables

Explanatory Variables	Mean	Maximum	Minimum	Standard Deviation
XD (Discontinuity)	0.872727	7.0000	0.0000	1.649699
XOE (Other Events)	0.260606	2.0000	0.0000	0.561976
XAP (Accounting Practices)	0.975758	8.0000	0.0000	1.541901
Control Variables	**Mean**	**Maximum**	**Minimum**	**Standard Deviation**
TA	1720.776	16.111.73	6.860000	3.492.298
Beta	0.627762	4.810000	-59.700	1.295984
Cash-Yield	0.132076	3.980000	0.0000	0.466225
Ind	3.910606	244.3500	0.0000	23.77091
GL	0.821455	16.17000	0.0000	1.325938
NP	9.210182	716.5800	-3,796.100	147.7896
GDP	3.640000	6.100000	-0.200000	2.163043
Eq	162.0234	3163.250	-3333380	914.9999
NI	812.577	10395.450	0.0000	1948.716
EXR	725625.8	740893.0	708,020.0	11677.95

Among the explanatory variables, the disclosure of accounting practices (XAP) has the highest incidence (0.9757), followed by the disclosure of operational discontinuity indicators (0.8727).

The correlation analysis allowed for the opportunity to identify the multicollinearity relationships that occur with 2 or more independent variables, as shown in Table 2: net income (NI) and total assets (TA); disclosure of accounting practices (XAP) with disclosure of operational discontinuity (XD); disclosure of accounting practices with disclosure of other events (XOE); equity (Eq), and net profit (NP).

© 2014 Global Journals Inc. (US)

Table 2 : Correlation matrix of variables

	1	2	3	4	5	6	7	8	9	10	11	12	13
XD	1.000												
XDE	0.463	1.000											
XPC	0.653	0.598	1.000										
AT	-0.176	-0.180	-0.161	1.000									
BETA	-0.061	-0.056	0.008	0.232	1.000								
DIV_ACAO	-0.066	-0.117	-0.078	0.413	0.223	1.000							
END	-0.084	0.165	-0.090	-0.074	-0.076	-0.042	1.000						
LG	-0.137	-0.117	0.045	0.004	0.056	0.219	-0.095	1.000					
LL	-0.042	-0.123	-0.003	0.422	0.254	0.330	-0.337	0.125	1.000				
PIB	0.033	-0.037	-0.018	-0.044	-0.025	-0.065	-0.071	-0.121	-0.005	1.000			
PL	-0.128	-0.205	-0.064	0.578	0.260	0.266	-0.522	0.161	0.746	0.004	1.000		
RL	-0.141	-0.166	-0.157	0.864	0.152	0.424	-0.063	-0.035	-0.294	-0.012	0.388	1.000	
TC	0.002	0.039	0.053	-0.062	-0.179	-0.106	-0.078	-0.028	-0.069	-0.150	-0.007	-0.021	1.000

The variables excluded from the model were XD (disclosure of operational discontinuity), XOE (disclosure of other events), TA (total assets) and NP (net profit) because they had large P-values (probability). The variables TA and NP, although they were proposed to measure the influence of size, were not included in the regression because they did not contribute to the model.

To achieve a model with significant explanatory variables, a significance level of up to 10% was considered. Under this condition, the following variables were excluded: equity (Eq), indebtedness (Ind), and general liquidity (GL) because they were not significant. However, the only relevant variable continued to be disclosure of indicators of accounting practices (XAP), and this variable became more significant (near 0.10) when controlling for the sector of activity.

IX. Regression Analyses by Ordinary Least Squares

Table 3 shows the results obtained with the regression model using the ordinary least squares method to identify the relationship between the explanatory variables, the level of information disclosure in the audit reports, and the dependent variable, variation in the mean company share price.

Table 3 : Estimating the statistical model

Variable	Coefficient	Std. Error	t-Statistic	Prob.
XPC	0.745436	0.452104	1.648814	0.1014
BETA	-1.191405	0.314032	-3.793896	0.0002
DIV_ACAO	0.973506	0.543986	1.789580	0.0757
PIB	0.267566	0.079854	3.350708	0.0010
TC	7.67E-05	1.32E-05	5.827426	0.0000
C	-55.32696	8.651987	-6.394712	0.0000
R-squared	0.142194	Mean dependent var.		0.520667
Adjusted R-squared	0.009294	S.D. dependent var.		5.814203
S.E. of regression	5.787120	Sum squared resid.		4755688
F-statistic	1.069936	Durbin-Watson		1.556699
Prob(F-statistic)	0.386424			
R-squared	0.142194	Mean dependent var.		0.520667
Sum squared resid	4755688	Durbin-Watson		1.556699

© 2014 Global Journals Inc. (US)

The indicator of disclosure of accounting practices has a coefficient of 0.7454, which indicates that for each unit of the XAP variation, the average value of shares varies 0.7454 (i.e., it explains variance sensitivity between the variable (Y) and the variable (XAP) by 0.7454 or 74.54%). This positive relationship indicates that as companies disclose more information for that indicator, the change in the average value of its shares on the market will be positive, thus confirming the agency theory discussed in this study.

The control variables that remained in the model, beta, cash-yield per share, GDP growth rate and exchange rate, had P-Values of 0.002, 0.0757, 0.0010, and 0.00, respectively. Beta had a negative relationship with the dependent variable, and the other control variables had a positive relationship, as expected from Equation 4.

The negative relationship demonstrated by beta indicates that if this variable increases 1 unit, the variation of the average share price will be -1.19 during the period examined. An increase in the GDP growth rate of 1% per year will be reflected in an increase of 0.2675 units in the calculated mean share price variation. An increase in the exchange rate of 1% per year results in an increase of 7.67 units in the calculated the mean share price variation. An increase of one unit in cash-yield per share yields an increase of 0.9735 units in the calculated mean share price variation.

X. Final Considerations

The present study aimed to identify if the disclosure of information through independent audit reports is correlated with variation in the mean prices of stocks traded after the disclosure and was based on a sample of traditional companies listed on Bovespa (from 2005 to 2009).

The results suggest that greater disclosure via an audit report and when considering a specific indicator provides investors with a better assessment of the company, which can reduce informational asymmetry and raise the level of confidence in the audited company.

The indicators of operational continuity and other events were not significant to the model and were therefore excluded. Thus, it is not possible to know whether this information has any relevance to users because it did not explain the mean share price of the companies studied.

The research reveals that statistically, the only indicator relevant to the model is the disclosure of accounting practices, and therefore, disclosing such information in the audit reports increases the variation in the mean share price of the companies (listed in the sample) after the audit report is disclosed.

This research does not claim to be a comprehensive review of this subject given Brazil's current regulatory scenario, in which information is disclosed through financial statements and audit reports to meet the standards that were based on the international market.

References Références Referencias

1. AKERLOF, G. A. (1970).“The market for “lemons”: quality uncertainty and the market mechanism”. Quarterly Journal of Economics, Oxford, v. 84, n. 3, p. 488-500, Aug. ALCHIAN, A.A.; DEMSETZ, H. (1972). “Production, Information Costs, and Economic Organization”. The American Economic Review. vol. 62, n. 5, p.777-795, dec.
2. ARAUJO, Francisco José. (2003). “Compreensão do parecer do auditor independente no Brasil”. Revista Brasileira de Contabilidade, v. 139, p. 71-82, jan./fev.
3. ARROW, K. J. (1963). “Uncertainty and the welfare economics of medical care”. The American Economic Review. v. LIII, n.5, p. 941-973.
4. BALL, R. J.; BROWN, W. (1968). “An Empirical Evaluation of Accounting Income Numbers”. Journal of Accounting Research, Chicago, v. 24, n. 1, p. 40-56, Spring.
5. BRASIL. Lei n.º 6.385, de 07 de dezembro de 1976 (Dispõe sobre o mercado de valores mobiliários e cria a Comissão de Valores Mobiliários). Disponível em: <http://www.planalto.gov.br/ccivil_03/Leis/QUADRO/1960-1980.htm>. Acesso em: 20 nov. 2010.
6. _____.Lei n.º 6.404, de 15 de dezembro de 1976 (Dispõe sobre as Sociedades por Ações). Disponível em: <http://www.planalto.gov.br/ccivil_03/Leis/QUADRO/1960-1980.htm>. Acesso em: 20 nov. 2010.
7. _____. Lei n.º 11.638, de 28 de dezembro de 2007 (Altera e revoga dispositivos da Lei no 6.404, de 15 de dezembro de 1976, e da Lei no 6.385, de 7 de dezembro de 1976, e estende às sociedades de grande porte disposições relativas à elaboração e divulgação de demonstrações financeiras). Disponível em: http://www.planalto.gov.br/ccivil_03/_ato2007-2010/2007/lei/l11638.htm. Acesso em: 20 dez. 2010.
8. _____. Lei n.º 11.941, de 27 de Maio de 2009 (Altera a legislação tributária federal relativa ao parcelamento ordinário de débitos tributários; concede remissão nos casos em que especifica; institui regime tributário de transição). Disponível em: http://www.planalto.gov.br/ccivil_03/_Ato2007-2010/2009/Lei/L11941.htm. Acesso em: 30 dez. 2010.
9. CHOW, C. W. (1982). “The Demand of External Auditing: Size, Debt and Ownership Influences”. The Accounting Review, Sarasota, v. 52, p. 272-291,
10. _____; WONG-BOREN, A. (1987). “Voluntary financial disclosure by Mexican corporations”. The Accounting Review, Sarasota, v. 62, p. 533-541.

© 2014 Global Journals Inc. (US)

11. COMISSÃO DE VALORES MOBILIARIOS – CVM. Deliberação n. 488, de 3 de Outubro de 2005. Disponível em: <http://www.portaldecontabilidade.com.br/legislacao/deliberacaocvm488>. Acesso em: 20 dez. 2010.
12. CONSELHO FEDERAL DE CONTABILIDADE. Resolução n.º 820, de 1997. Aprova a NBC T 11 – Normas de Auditoria Independente das Demonstrações Contábeis com Alterações e dá outras providências. Disponível em: <http://www.cfc.org.br>. Acesso em: 05 jan. 2010.
13. _____. Resolução n.º 1.037, de 23 de agosto de 2005. Aprova NBC T 11.10. Continuidade Normal das Atividades da Entidade. Disponível em: <http://www.cfc.org.br>. Acesso em: 05 jan. 2010.
14. _____. Resolução n.º 1.203, de 27 de novembro de 2009 (Aprova a NBC TA 200 – Objetivos Gerais do Auditor Independente e a Condução da Auditoria em Conformidade com Normas de Auditoria). Disponível em: <http://www.cfc.org.br>. Acesso em: 05 jan. 2010.
15. COOKE, T.E. (1989). "Disclosure in the corporate annual reports of Swedish companies". Accounting and Business Research, [s.l.], n. 19, p. 113-124, a.
16. _____. (1989). "Voluntary corporate disclosure by Swedish companies". Journal of International Financial Management and Accounting, [s.l.], n. 1, p. 171-195, b.
17. CRASWELL, A. T.; TAYLOR, S. L. (1992). "Discretionary disclosure of reserves by oil and gas companies: an economic analysis". Journal of Business, Finance, and Accounting, [s.l.], n. 19, p. 295-309, Jan.
18. CUTLER, D. M., ZECKHAUSER, R. J. (1997). "Adverse selection in health insurance". Cambridge MA.: National Bureau of Economic Research, 1997. 29p. (NBER Working Paper; n.6107).
19. DeANGELO, L. E. (1981). "Auditor size and audit quality". Journal of Accounting and Economics, [s.l.], n. 3, p. 183-99, Dec.
20. FASB – Financial Account Standards Board. <http://www.fasb.org/st/#cons.> Acesso em: 20 mai. 2010.
21. FIRTH, M. (1979). "The impact of size, stock market quotation, and auditors on voluntary disclosure in corporate annual reports". Accounting and Business Research, [s.l.], n. 9, p. 273-280.
22. HEALY, P.; PALEPU, K. (2001). "Information asymmetry, corporate disclosure, and the capital markets: A review of the empirical disclosure literature". Journal of Accounting and Economics, Boston, v. 31, p. 405-440.
23. INCHAUSTI, B.G. (1997). "The Influence of Compapy Characteristics and Accounting Regulation on Information Disclosed by Spanish Firms". European Accounting Review, [s.l.], v. 6, n. 1, p. 45-68.
24. JENSEN, M.C.; MECKLING, W. H. (1976)."Theory of the firm: Managerial behavior, agency costs, and ownership structure". Journal of Financial Economics, [s.l.], v. 3, p. 305-360.
25. KREPS, D. (1994). A course of microeconomics theory. New York: Harvester Wheatsheaf.
26. LEVENTIS, S.; WEETMAN, P. (2000). "Exploring and Explaining Variations in Voluntary Disclosure in an European Emerging Capital Market: Evidence from the Arhens Stock Exchange". REGIONAL CONFERENCE, 2000, Paper… [s.l.]: University of Aberdeen.
27. LEVITT, A. (1998). "The importance of high quality accounting standards". Accounting Horizons, [s.l.], v. 12, p.79-82.
28. MACAGNAN, Clea Beatriz. (2005). "Factores Explicativos de la Revelación de Información de Activos Intangibles de Empresas que Cotizan en España". Tese (Doctorado en Creación, Estrategia y Gestión de Empresas) – Departamento de Economía de la Empresa, Universidade Autonoma de Barcelona, Barcelona.
29. MILGROM, P.; ROBERTS, J. (1992). Economics, Organizacional & Management. New Jersey: Prentice-Hall.
30. MISHKIN, F. (1991). "A Multi-Country Study of the Information in the Shorter Maturity Term Structure about Future Inoation". Journal of International Money and Finance, [s.l.], n. 10, p. 02-22.
31. OWUSU-ANSAH, S. (1997). "The determinants of voluntary financial disclosure by Swiss listed companies: A comment". The European Accounting Review, [s.l.], v. 6, p. 487-492.
32. PATTON, J.; ZELENKA, I. (1997). "An empirical analysis of the determination of the extent disclosure in annual reports of joint stock companies in the Czech Republic". The European Accounting Review, [s.l.], v. 6, p. 605-626.
33. PIACENTINI, Neusa. (2004). "Evidenciação Contábil Voluntária: uma análise da prática adotada por companhias abertas brasileiras". Dissertação (Mestrado em Ciências Contábeis)– Programa de Pós-Graduação em Ciências Contábeis, Universidade do Vale do Rio dos Sinos - UNISINOS, São Leopoldo, RS.
34. RAFFOURNIER, B. (1995). "The Determinants of Voluntary Financial Disclosure by Swiss Listed Companies". The European Accounting Review, [s.l.], n. 4, p. 261-280.
35. ROTHSCHILD, M.; STIGLITZ, J. (1976). "Equilibrium in competitive insurance markets: an essay on the economics of imperfect information". Quarterly Journal of Economics, Oxford, v. 90, p. 629-649.
36. VERRECCHIA, R. (1999). "Disclosure and cost of capital: A discussion". Journal of Accounting and Economics, Boston, v. 26. p. 271-283.

© 2014 Global Journals Inc. (US)

37. WALLACE, O.; NASER, K.; MORA, A. (1994). "The relationship between the comprehensiveness of corporate annual reports and firm characteristics in Spain". Accounting and Business Research, [s.l.], v. 25, n. 97, p. 41-53.

38. ZHANG, J. (2008). "Corporate competitive strategy voluntary disclosure and company characters". Social Science Research Network. Mai. Disponível em: <www.ssrn.com>. Acesso em: 12 set. 2010.

Appendix I : Indicators of Operational Discontinuity

Operational Continuity Indicators	Financial Indications	1. Unsecured liability (negative equity)
		2. Negative position of circulating capital (deficiency of circulating capital)
		3. Fixed-term loans with immediate maturities and no realistic prospect of payment or renewal, or overuse of short-term loans to finance long-term assets
		4. Continuously adverse main financial indexes
		5. Continuous substantial operating losses
		6. Lack of debtors' financial capacity to pay their commitments with the entity
		7. Late payments or financial inability to propose and pay dividends
		8. Financial Inability to pay creditors on due dates
		9. Difficulty to meet the conditions of loan contracts (such as fulfillment of financial indexes contracted, guarantees or sureties)
		10. Change from credit transactions to cash payment of suppliers
		11. Inability to obtain financing for development of new business products and for investments in increasing productive capacity
		12. Loss of key personnel in the administration, without replacement
	Operational Indications	13. Loss of license, franchise, important market, essential strategic supplier, or strategic financer
		14. Difficulty of maintaining manpower essential to the maintenance of activity or lack of important supplies
		15. Breach of minimum capital requirements or other legal or regulatory requirements, including the statutory
	Other Indications	16. Legal and administrative procedures or contingencies pending against the entity that result in obligations that cannot be met
		17. Changes in legislation or government policy adversely affecting the entity
		18. For the entities subject to control by governmental regulators, such as the CVM, the Central Bank of Brazil (Banco Central do Brasil – BCB), the National Electric Energy Agency (Agência Nacional de Energia Elétrica – Aneel), National Telecommunications Agency (Agência Nacional de Telecomunicações – Anatel), National Health Agency (Agência Nacional de Saúde Suplementar – ANS), Superintendent of Private Insurance (Superintendência de Seguros Privados – Susep), Social Security (Secretaria de Previdência Complementar – SPC), and others, the risk factors inherent in their activities should be considered
		19. Uncertainty about the company's operational continuity

Appendix II : Indicators Created from Content Analysis

Indicators of Accounting Practices	Current and Non-current Assets	1. Lawsuits (labor/civil/tax) moved by the company with or without legal deposit
		2. Accounting adjustments made, including previous years
		3. Acquisition of public debt policies
		4. Fixed assets - evaluation, reclassification, appreciation, depreciation, adjustment
		5. Investments evaluation - evaluation method
		6. Incomplete accounts and/or account reconciliations in progress: bank reconciliations
		7. Accounts receivable subject to value changes due to changes in the law or legal decisions
		8. Leasing contracts
		9. Tax credits

© 2014 Global Journals Inc. (US)

		10. Deferred foreign exchange losses (exchange variation)
		11. Divergence of values of tax debits recorded
		12. Stocks: valuation/control/counting/registry errors
		13. Provisions: losses, contingencies, rollback
		14. Receipt of claims in shares of other companies
		15. Reclassification and/or revaluation of other assets (except fixed assets)
		16. Transactions with related parties with or without provision for losses
Indicators of Accounting Practices	Current and Non-Current Liabilities	17. Payment of debts with shares
		18. Accounting adjustments performed including earlier years
		19. Loans: acquiring new debts, revision of terms and values, adjustments
	Other Accounting Information	20. Incomplete disclosure of mandatory financial statements
		21. Information on related subsidiaries or investees
		22. Limitation of audit procedures - omission/unavailability of accounting records and/or evidentiary documents
		23. Failure to comply with accounting practices and regulations
		24. Accounting systems/internal control - inadequate or inefficient
Indicators of Disclosure - Other Events		25. Accepting contracts/plans/strategies
		26. Split
		27. Creation of retirement/pension plans for employees without actuarial reports or with differing values
		28. Exclusion from tax reduction/installment programs: Refis/Paes/Paex
		29. Inclusion in tax reduction/installment programs: Refis/Paes/Paex
		30. Intervention and/or seizure of documents by fiscal authority/regulatory body
		31. Legal recovery request
		32. Notification of infraction by regulatory body
		33. Reorganization of documents stream
		34. Reporting on explanatory notes without disclosure of caveat content
		35. Trade accounts receivable/non-fulfilled
		36. Absence of opinion

© 2014 Global Journals Inc. (US)

Global Journal of Management and Business Research: D
Accounting and Auditing
Volume 14 Issue 5 Version 1.0 Year 2014
Type: Double Blind Peer Reviewed International Research Journal
Publisher: Global Journals Inc. (USA)
Online ISSN: 2249-4588 & Print ISSN: 0975-5853

The Impact of the Managerial Empowerment in the Performance of Investment Funds in the Jordanian Public Universities

By Seif Obeid ALshbiel

AL albayt University, Jordan

Abstract- This study aimed to identify the impact of the managerial empowerment in the performance of investment funds in the Jordanian public universities.

To achieve the objective of the study questionnaire was designed and distributed to a sample of the study, which consisted of (40) male and female employees who work in investment funds in the Jordanian public universities. The results indicated that the level of the managerial empowerment for staff of investment funds in the Jordanian public universities was a moderate level, also the results revels that the level of performance of the investment funds in these universities was a moderate level. The results showed that there is statistically significant effect for the managerial empowerment on the performance of the investment funds in Jordanian public universities.

Keywords: managerial empowerment, performance of investment funds, jordanian public universities.

GJMBR - D Classification : JEL Code : P45

THE IMPACT OF THE MANAGERIAL EMPOWERMENT IN THE PERFORMANCE OF INVESTMENT FUNDS IN THE JORDANIAN PUBLIC UNIVERSITIES

Strictly as per the compliance and regulations of:

Research | Diversity | Ethics

© 2014. Seif Obeid ALshbiel. This is a research/review paper, distributed under the terms of the Creative Commons Attribution-Noncommercial 3.0 Unported License http://creativecommons.org/licenses/by-nc/3.0/), permitting all non-commercial use, distribution, and reproduction in any medium, provided the original work is properly cited.

The Impact of the Managerial Empowerment in the Performance of Investment Funds in the Jordanian Public Universities

Seif Obeid ALshbiel

Abstract- This study aimed to identify the impact of the managerial empowerment in the performance of investment funds in the Jordanian public universities.

To achieve the objective of the study questionnaire was designed and distributed to a sample of the study, which consisted of (40) male and female employees who work in investment funds in the Jordanian public universities. The results indicated that the level of the managerial empowerment for staff of investment funds in the Jordanian public universities was a moderate level, also the results revels that the level of performance of the investment funds in these universities was a moderate level. The results showed that there is statistically significant effect for the managerial empowerment on the performance of the investment funds in Jordanian public universities. The study recommended that there is a need to raise the level of managerial empowerment for the employees who work in investment funds in the Jordanian public universities, and investment funds in the Jordanian public universities should diversification it's investment activities.

Keywords: managerial empowerment, performance of investment funds, jordanian public universities.

I. Introduction

The managerial empowerment of the workers is one of the recent concepts which the institutions managements rely upon in treating the workers' problems at these institutions. Mostly, are the issues of their job satisfaction, which in turn, defines the performance level of the institution, For instance, workers' participation in setting the goals and the plans, and decision-making, may lead to an occupational satisfaction increase, through their comfort feeling, and accepting the duties and tasks assigned to them. This will further lead to raising the level of their performance and achieving the occupational stability and security, as well as high commitment to the work, which will lead to raising the level of the institution performance as a whole (Abdul Hussein, 2012). In this concern, the performance concept represents the quality of the works realized by the workers, which will be reflected on the institutional performance quality. The higher the workers' performance, the more positive improvement achieved in the institutional performance quality.

Nixon described empowerment as an managerial strategy employed to incite and encourage the individual workers, including the managers, for the purpose of providing their special skills and experiences in a better manner. This will be made by offering them more power and freedom of action to perform their works, in addition to other resources and privileges, so that they will be able to work effectively toward serving the goals and objectives of the organization (Al-Douri, 2009).In the same vein, Shackletot emphasized that empowerment is the philosophy of granting the individuals in the lower managerial levels more responsibilities and powers of decision-making (Al-Otaibi, 2005). In addition, Potochny finds that empowering the qualified workers, or those who possess efficacy, will lead to a distinguished and exceptional service delivery throughout the most competitive markets, and consequently, double the profits. He further indicated that workers' empowerment is the tool that will increase the revenues and develop the workers in the lower levels of the occupational hierarchy, which will contribute to the productivity and quality (Al-Maani, 2008).

II. The Study Problem

The investment funds in the Jordanian public universities form the instrument by which the different commercial projects (businesses) and investment projects are created in the areas of real estates and securities. In addition, they take part in the investment projects of the investment funds of other universities or in the same university. As such, the performance level of the investment funds in the public universities is defined by the quality of the projects they carry out, and the appropriate managing manner by the responsible individuals working in these funds.

The researcher, through examining the performance of certain investment funds in the Jordanian Public Universities, and interviewing their investment managers, found that in case the universities administrations are granted powers for the management of the fund more freely, more profits were achieved, even higher than the expectations. On the contrary,

Author: Head of Accounting Department Faculty of Finance and Business Administration AL Al-bayt University, Mafraq, Jordan.
e-mail: seif198272@yahoo.com

© 2014 Global Journals Inc. (US)

when some university administrations were changed and the employment of the fund property was frozen, the funds suffered from consecutive losses. This is a direct result of non-empowerment of the fund management to properly administer its monies. As a result, the study problem is determined by the absence of the empowerment concept of the investment funds of some Jordanian public universities, which led to a decline in their performance, as a result of the responsibility of some university rectors toward the management of these funds, in addition to his/her other academic and financial responsibilities. These, in turn, resulted in his/her inability to cover all these managerial duties alone, and poor ability to know the important, tiny details and particulars of the investment aspects of these funds. In addition, he/she is not specialized in the investment area. However, the study problem is defined through the following questions.

1- What is the Managerial Empowerment level of the investment funds' employees in the Jordanian Public Universities, from their point of view?
2- What is the performance level of the investment funds in the Jordanian Public Universities, from the workers' point of view?
3- Is there an The Impact of the Managerial Empowerment in its following dimensions (authority delegation, training, participation in the decision making, motivating the employees) in the investment funds performance of the Jordanian Public Universities, from the views of the workers in these funds?

III. Study Objectives

The study aims at achieving the following:

1- To identify the Managerial Empowerment of the investment funds employees in the Jordanian Public Universities, as viewed by them.
2- To identify the investment funds performance level in the Jordanian Public Universities as viewed by the workers in these funds.
3- To identify the Impact of the Managerial Empowerment in its following dimensions (authority delegation, training, participation in the decision making, motivating the employees) in the investment funds performance of the Jordanian Public Universities, as viewed by the workers in these funds.

IV. Importance of the Study

This study derives its importance from the Managerial Empowerment importance, and the role it plays in the improvement of the workers' performance; and as a result, improvement of the institutional performance as a whole. In addition, there is the importance of the issue of the investment funds in the Jordanian Public Universities, their developmental role in achieving financial returns and providing financial services to the workers, which will be reflected in the level of the services provided to the local community. Moreover, as far the knowledge of the researcher goes, there is no Arabic or foreign studies that dealt in the issue of the managerial empowerment effect on the investment funds performance, in general, and the investment funds in the Jordanian Public Universities, in particular. Thus, this study forms a new addition to the literatures and studies of the Managerial Empowerment both at the Arab and foreign levels.

V. Study Hypotheses

This study examined the following hypotheses:

H1: The Managerial Empowerment level of the investment funds employees in the Jordanian Public Universities, from their point of view, is medium

H2: The performance level of the investment funds in the Jordanian Public Universities, from their employees' point of view, is medium.

H3: There is a statistically significant effect ($\square < 0.05$) of the Managerial Empowerment dimensions (authority delegation, training, participation in the decision making, motivating the employees) on the investment funds performance in the Jordanian Public Universities.

VI. Theoretical Framework and Previous Studies

Concept of the Managerial Empowerment may be differently defined. However, in general, empowerment most often includes an agreed upon basic factor; that is providing discretion to the employees regarding certain occupational tasks (Karim & Rehman, 2012).

Empowerment was further defined as the motivation increase of the workers at work through power delegation to the lower levels of the organization (Seibert, et al, 2004).

Noe, et al (2008) indicated that empowerment is offering the workers of the organization responsibility and authority for decision making. Meanwhile, Al-Maani and Akhoo Irshaideh (2009, p.234) defined it as: "Equipping workers with power, knowledge and resources required for achieving the organization objectives." On the other hand, Elnaga and Imran (2014) explained that empowerment is the level of responsibility and authority given to the workers of the institution.

Through reviewing the concept that tackled the term "empowerment", it is clear that there are different views on the definition. Nonetheless, most of them agree that empowerment is pivoted around granting the employees more authorities and freedom in the specified job area, which the employee is carrying out; as per the specific description of this job, on one hand,

© 2014 Global Journals Inc. (US)

and granting him/her freedom to participate and show point of view in issues related to the job, on the other.

a) Benefits of Empowerment

Many researchers investigated the benefits that could be achieved by empowerment, so as to include all the workers of the organization and the clients, or recipients of the services provided by the corporation. Here below are the most prominent advantages the workers may realize through empowerment (Clark, 1999; Bourk, 1998 & Dover, 2009):

1- Increasing the demand for individual training and teaching, developing efficacy through cross-training, and knowledge exchange among the supervisors and employees.
2- Increasing the contributions and ideas of the workers of the organization, in a manner that leads to the increase of the innovative abilities, and reinforcement of the workers' positive feelings.
3- Strengthening the individuals' relations and supporting them through the teamwork, which will result in reducing the conflicts, and dispute between the management and workers.
4- Supporting the authority granted to the individuals and reducing the control to achieve better productivity.
5- Increasing the workers' job satisfaction as a result of their participation in coining and defining the goals and objectives.

As for the benefits of empowerment for the institution, they include the following:

1- Low labor turnover average as well as low absenteeism rates due to the high morale of the institution workers, through their partaking in the managerial decision-making (Nedd, 2004).
2- Realization of the competitive advantage of the institution, through the workers' contribution to provide innovative thoughts and improve the quality of their job outcomes (Mathews, 2003).
3- Improving the quality of the commodities and services as a result of workers' attainment of sufficient training, skills and experiences.
4- Assuring the organization effectiveness through improving the services quality and speed in accomplishing the duties without errors.

b) Empowerment Dimensions

Al-Otaibi (2005) explained that that empowerment dimensions are centered on the following points:

i. *Delegation of Authority*

The foundation of the Managerial Empowerment is based upon authority delegation to the lower managerial levels, in a manner enabling them possess power to participate in the different managerial decision-making in the different administrations. The empowerment idea requires a change in the traditional leading styles, so that they will be turned into leaderships that believe in the workers' participation and authorizing them their decision-making; which in turn requires the shift of control and direction to trust and authorization.

ii. *Work Teams*

Work within a one work team is deemed the foundation upon which the success of the organization is built. This concept forms the unity among the workers through their unity for achieving the planned objectives, and their unity in problem solving, as well as facing the work difficulties through distributing the tasks and defining the roles of every worker. Consequently, a feeling emerges with the workers that they are a one unit possessing common objectives. This is important to make the empowered workers feel that they are working as a group in problem solving, and that their ideas are respected and taken seriously.

iii. *Training*

Empowering the workers requires ongoing and regular training to enable them gain new skills, develop these skills with them and increase their experiences and efficiencies. The effective employees' training includes getting them gain a number of managerial skills such as: negotiation skills, decision-making skills, problem and dispute solving skills, and leadership skills; in addition to skills of knowledge-building, time management, and methods of dealing with business organizations.

iv. *Effective Communication*

Effective communication is one of the elements necessary for enabling the workers of the institution. It further reflects freedom in accessing the critical information at a high degree of communication inside the institution, so that the information will flow among the different managerial levels in the institution; in a manner enabling the workers know the information pertinent to its performance, strategy and methods of achieving its goals, among other types of information. This will result in increasing the ability of the workers to identify the strengths and weaknesses of the institution and treat whatever needed for financial or managerial weakness.

c) Previous Studies

There are many studies that dealt in managerial empowerment, and as far the knowledge of the researcher goes, there is scarcity in the number of studies that examined the Impact of empowerment on the investment funds of the official universities, as viewed by the workers in these funds.

Al-Suwai'e & Al-Ta'ani (2013) conducted a study aimed at identifying the nature of the relationship between the Managerial Empowerment and job satisfaction with the principals of the public schools in Dammam governorate, Kingdom of Saudi Arabia. The

© 2014 Global Journals Inc. (US)

study sample consisted of (350) male and female principals of the public schools in Dammam governorate, Kingdom of Saudi Arabia, in the school year 2009/2010. A questionnaire was constructed and distributed over them for collecting the information that may serve the study objective. The results of the study showed a strong and positive relationship between the Managerial Empowerment and job satisfaction. The results further indicated that the level of managerial empowerment in Saudi schools is high. On the other hand, it showed that the job satisfaction level of the principals working at these schools is medium.

The study of Nusairat and Al-Madi (2011) aimed at identifying the Impact of the Managerial Empowerment on applying the total quality management (TQM) in the University of Jordan Hospital. The study was conducted on a sample of the Hospital employees (n=319). The study employed the descriptive, analytical method, using a questionnaire which was constructed to measure the study variables. One of the most important results of the study was that the Hospital applies the total quality management at a medium degree. The study sample saw that they feel medium level of empowerment; with a statically significant Impact of empowerment on applying the total quality management.

Al-Tarawneh & Mubaydeen (2010) conducted a study to define the level of the managerial empowerment and creative thinking of the workers of the commercial banks in Jordan. It also aimed at examining the Impact of the empowerment dimensions on the creative behavior. The study sample consisted of (391) employees of the commercial banks in Jordan. For the purpose of achieving the study objectives, the researchers constructed a questionnaire, and used the descriptive, analytical method. The results showed that the commercial banks practice empowerment of different areas, as well as creative behavior at a medium level. The study also indicated that there is a statistically significant Impact of the following empowerment dimensions (power delegation, participation in decision-making, applying the teamwork management, creating the supporting culture, and training and teaching the workers) on the workers' creative behavior.

The study of Bin-Nafelah & Fallaq (2011) investigated the degree of the Managerial Empowerment on the employees' creativity. The study consisted of (82) individuals of the managerial body in the Jordan Telecommunication Group Co. (Orange). This effect was tested using the multiple regression analysis and uni-variance analysis (ANOVA). The results found a statistically significant Impact of the Managerial Empowerment in the managerial creativity level the employees feel. It further indicated that there are no statistically significant effects in the perceptions of the employees toward the concept of the Managerial Empowerment ascribed to the service period and job title. The study offered many recommendations such as: work toward spreading the empowerment culture with the employees of Jordan Telecommunication Group; reconsideration of the salaries and bonuses systems; and applying promotion programs far from favoritism.

Al-Dala'een (2010) conducted a study to investigate the Impact of the Managerial Empowerment on the organizational excellence in Jordan. The study consisted of (621) individuals working for the Jordan Telecommunication Co. A questionnaire was constructed and distributed over them for collecting the data that may serve the objective of the study. However, (567) questionnaires were returned, and (14) ones were ruled out, as they were unfit for analysis, bringing about (89.05%) return rate of the total questionnaires distributed over the sample. The study results indicated that the perception level of the Jordan Telecom. Co workers of the empowerment dimensions, as well as the dimensions of the business organization excellence was high. The results further showed that there was an important, statistically significant Impact of the Managerial Empowerment in the business organization of Jordan Telecom Company.

The study of Radi (2010) aimed at identifying the relationship nature between the Managerial Empowerment and workers' creativity in Al-Qadisiah University, Iraq. The study sample consisted of the staff of the Faculty of Administration and Economics, Al-Qadisiah University (n=50), randomly selected. A questionnaire was distributed over them, (42) were returned; and (5) excluded because they were unfit for analysis. As such, the total number of the questionnaires suitable for analysis was (37) making up 74% of the total questionnaires distributed. The study results indicated a statistically significant relationship between the Managerial Empowerment and creativity of the employees of Al-Qadisiah University, Iraq.

Study of Elnaga & Imran (2014) aimed at identifying the Impact of the workers' empowerment on the job satisfaction. For achieving the objectives of the study, the theoretical, analytical method was applied, through reviewing the previous literature, underlining the empowerment concept, its benefits and disadvantages, in addition to dealing with empowerment practicing in certain organizations. The results showed that empowerment is mainly correlated with establishing and building trust between the administration and employees, and stimulating their participation. It is one of the modern concepts that possess ability to improve the human factor in the modern organizations to realize the highest possible cooperation, teamwork spirit, self-confidence, creativity, thinking in the future and entrepreneurship.

The aim of the study of Isimoya & Bakarey (2013) was to identify the relationship nature between the workers' empowerment and job satisfaction in Nigeria. The study sample comprised (200) workers in

© 2014 Global Journals Inc. (US)

the Nigerian insurance companies. A questionnaire was designed and distributed over the study sample for the purpose of collecting the data required for the study objectives. The results indicated a statistically significant Impact of the workers' empowerment on their job satisfaction.

The study of Meyerson & Dewettinck (2012) examined the Impact of empowerment on the performance of the employees in the United States of America. The study sample consisted of (226) individuals working in the telecommunication companies in the United States, who were randomly selected; and a questionnaire was distributed over them for data collection. The results of the study indicated an Impact of applying empowerment on the workers' performance; as there were statistically significant differences concerning the performance of the employees before and after the application of empowerment attributed to post-empowerment period.

VII. Methodology

a) Study Population and Sample

This study population consisted of all the workers in the investment funds of the public universities in Jordan (n=45) as were on Dec. 01, 2013. One university requested exemption for non-completion of the questionnaire, bringing the total sample individuals to 40 only.

b) Study Instrument

Following an extrapolation of the previous studies, and reviewing the empowerment literature, a questionnaire was constructed to collect data from the study sample, based on the study of Nusairat and Al-Madi (2011), and the study of Bin- Nafelah & Fallaq (2011). To ensure the validity and reliability of the instrument, as well as the validity of its items, it had been presented to specialized arbitrators in the academic fields, and workers in the investment funds, for the purpose of suitability of the items and instrument validity as well. The study instrument reliability was further assured using Chronbach Alpha test on all the areas of the study. Table No. (1) Illustrates this.

Table 1 : Chronbach Alpha Coefficients of the Study Areas

Area	Chronbach Alpha Coefficient
Authority Delegation	0.87
Motivation	0.83
Participation in decision-making	0.89
Training	0.91
Investment Fund Performance	0.90
Areas as a Whole	0.92

Table No. (1) shows that Chronbach Alpha coefficients for the Managerial Empowerment effect on the investment funds' performance in the Jordanian official universities ranged between (0.83-0.91), with "training" area being the highest, and "motivation" area being the lowest. Chronbach Alpha of the investment funds' performance in the Jordanian official universities, as a whole, amounted (0.92), which is a high and acceptable value for the purposes of applying the study.

To determine the statistical standard for explaining the means of the estimations of the study sample on every item of the questionnaire, and every area, the following standard was applied:

Table 2 : Statistical Standard for Explaining the Means

Mean	Agreement Degree
From 1.00- less than 1.80	Very Low
From 1.80- less than 2.60	Low
From 2.60- less than 3.40	Medium
From 3.40- less than 4.20	High
From 4.20– less than 5.00	Very High

c) Description of the Study Sample Characteristics

The study consisted of (40) employees and administrators who work in the investment funds of the Jordanian official universities. Table No. (3) Shows the frequencies and percentages of the personal variables of the study sample as follows:

Table 3 : Characteristics of the Study Sample

Variable	Categories	Frequencies	Percentage
Gender	Male	22	55.0
	Female	18	45.0

© 2014 Global Journals Inc. (US)

	Total	40	100.0
Job Title (Designation)	Manager	12	30.0
	Assistant Manager	17	42.5
	Administrative	11	27.5
	Total	40	100.0
Age	From 30-40 years	13	32.5
	From 41-50 years	17	42.5
	More than 50 years	10	25.0
	Total	40	100.0
Academic Qualification	BA	22	55.0
	Higher Education	18	45.0
	Total	40	100.0
Years of Experience	5-10 years	14	35.0
	11-15 years	16	40.0
	More than 15 years	10	25.0
	Total	40	100.0
Academic Specialization	Accounting	9	22.5
	Finance	10	25.0
	Business Administration	9	22.5
	Economics	6	15.0
	Other	6	15.0
	Total	40	100.0

In the Table No. (3), as for the gender variable, we find that the males are (22) administrative people accounting for (55.1%) of the total study sample.

As for the job title variable, the category "assistant manager" had the highest frequencies (17), comprising (42.5%) of the total study sample. Meanwhile, "manager" category (12) came second, comprising (30.0%) of the study sample; and the "administrative" category (11) ranked last, with a 27.5% of the total study sample.

Regarding the age variable, the highest frequency of the category (41-50) years came first (17), accounting for (42.5%) of the total study sample; and the category (more than 50 years) came last (10), making only (25.0%) of the total study sample.

As for the academic qualification variable, the highest frequency was for the BA category (22), amounting for (55.0%) of the total study sample; and Higher Education category (18) came last with only (45.0%) of the total study sample.

Regarding the years of experience variable, (11-15 years) category (16) came with highest frequency numbers, forming (40.0%) of the total study sample. On the other hand, the (more than 15 years) category came last with (10) frequencies and (25.0) of the total study sample. Finally, the academic specialization variable, the highest frequency (10) was for "finance" category (25.5%), and "economics and other" category (6) came last with only (15.0%) of the total study sample.

d) Study Hypotheses Test

H 1: the Managerial Empowerment level of the investment funds employees in the Jordanian Public Universities, from their point of view, is medium

For testing this hypothesis, the researcher obtained the means (M) and standard deviations (SD) of the level of the Managerial Empowerment effect (authority delegation, motivation, participation in the decision making, training) in the Jordanian Public Universities. The following table illustrates this.

Table 4 : Means and Standard Deviations of the Areas of the Managerial Empowerment of the Investment Funds' Employees in the Jordanian Public Universities.

No.	Area	Mean	SD	Rank	Degree
1	Authority Delegation	3.16	0.59	4	Medium
2	Motivation	3.37	0.73	2	Medium
3	Participation in Decision-Making	3.41	0.82	1	Medium
4	Training	3.18	0.78	3	Medium
The Instrument as a Whole		3.27	0.36	-	Medium

Table No. (4) Shows that the means ranged between (3.16-3.41), with "participation in decision-making" area was the highest, with a medium degree; followed by "motivation" (M=3.37) and medium degree. "Motivation" came third with (3.18) M and medium degree; and finally, "authority delegation" came last with (3.16) M and medium degree as well. The mean of the instrument as a whole was (3.27) with a medium degree. However, this result is in line with the study of Nusairat and Al-Madi (2011), but not in line with that of Al-Suwai'e & Al-Ta'ani (2013), which indicated a high level of managerial empowerment with the principals of the public schools, Dammam Governorate, Kingdom of Saudi Arabia.

© 2014 Global Journals Inc. (US)

Here below are the M and SD of the Managerial Empowerment level of the investment funds' employees in the Jordanian Public Universities, on the items of every area, separately.

First Area: Authority Delegation

Table 5 : M and SD of the Items of Authority Delegation Area (N=40)

No.	Item	Mean	SD	Rank	Degree
1	Administration delegates sufficient authority for creating an investment portfolio	3.30	1.38	1	Medium
2	Administration offers sufficient flexibility for managing the fund businesses.	3.10	1.32	3	Medium
3	I have freedom to obtain funding	3.25	1.30	2	Medium
4	My occupation allows me a chance to take decisions independently.	3.00	1.11	4	Medium
The Area as a Whole		3.16	0.59	-	Medium

Table No. (5) Shows that the M's ranged between (3.00-3.30), with the first rank was Item No. (1), providing: "Administration delegates sufficient authority for creating an investment portfolio", with a medium degree. In the second rank came Item No. (3), which states: "I have freedom to obtain funding", with (3.25) M and medium degree. The third rank was for Item No. (2), providing: "Administration offers sufficient flexibility for managing the fund businesses", with (3.10) M and medium degree. The fourth and last rank was for Item No. (4) stating: " My occupation allows me a chance to take decisions independently", still with medium degree. Finally the M of the area as a whole was (3.16) and a medium degree.

Second Area: Motivation

Table 6 : M and SD of the Items of Motivation Area (N=40)

No.	Item	Mean	SD	Rank	Degree
1	My supervisor appreciates my efforts spent at work	3.58	1.41	1	Medium
2	The reward is compatible to the efforts spent at work.	3.08	1.33	3	Medium
3	My supervisor talks about the investment fund achievements during the meetings	3.45	1.34	2	Medium
The Area as a Whole		3.37	0.73	-	Medium

Table No. (6) Shows that the means ranged between (3.08-3.58), with the first rank was for Item No. (1), providing: "My supervisor appreciates my efforts spent at work", with a medium degree. Item No. (3), stating: "My supervisor talks about the investment fund achievements during the meetings", ranked second with a (3.45) M and medium degree. In the last rank, came Item No. (2), providing: "The reward is compatible to the efforts spent at work", with a medium degree. The mean of the area "Motivation" as a whole was (3.37) with a medium degree as well.

Third Area: Participation in Decision-Making

Table 7 : M and SD' of the Items of Participation in Decision-Making (N=40)

No.	Item	Mean	SD	Rank	Degree
1	My supervisor seeks my view in the investment issues.	3.70	1.36	1	High
2	Study of the investment decisions in the fund is made in a participatory method with the workers.	3.20	1.32	3	Medium
3	The administration allows me a sufficient chance to express my investment proposals.	3.33	1.31	2	Medium
The Area as a Whole		3.41	0.82	-	Medium

Table No. (7) Shows that the means ranged between (3.20-3.70), with the first rank was for Item No. (1), providing: "My supervisor seeks my view in the investment issues ", with a high degree. In the second rank, came Item No. (3), stating: "The administration allows me a sufficient chance to express my investment proposals ", with a (3.33) M and medium degree. In the last rank, came Item No. (2), providing: "Study of the investment decisions in the fund is made in a participatory method with the workers ", with a medium degree. The mean of the area "Participation in the Decision-Making" as a whole was (3.41) with a medium degree.

Fourth Area: Training

© 2014 Global Journals Inc. (US)

Table 8 : M and SD of the Items of Training Area (N=40)

No.	Item	Mean	SD	Rank	Degree
1	The fund has a clear training plan to qualify the workers in the investment issues.	3.28	1.34	2	High
2	Training needs are defined in the light of the results of the fund businesses evaluation.	3.35	1.35	1	Medium
3	Management of the fund is well aware of the utmost importance of knowledge generation through training.	2.90	1.22	3	Medium
The Area as a Whole		3.18	0.78	-	Medium

Table No. (8) Shows that the means ranged between (2.90-3.35), with the first rank was for Item No. (2), providing: "Training needs are defined in the light of the results of the fund businesses evaluation", with a medium degree. In the second rank, came Item No. (1), stating: "The fund has a clear training plan to qualify the workers in the investment issues", with a (3.28) M and medium degree. In the last rank, came Item No. (3), providing: "Management of the fund is well aware of the utmost importance of knowledge generation through training", with a medium degree. The mean of the area "Training" as a whole was (3.18) with a medium degree.

H2: The performance level of the investment funds in the Jordanian Public Universities, from their employees' point of view, is medium.

For testing this hypothesis, the researcher obtained the means (M) and standard deviations (SD) of the level of the performance of the investment funds in the Jordanian Public Universities. The following table illustrates this.

Table 9 : M and SD of the Items of Investment Funds Performance (N=40)

No.	Item	Mean	SD	Rank	Degree
1	The financial results of the fund consistently show a profit	3.20	1.14	6	Medium
2	The fund realizes returns in investment better than in any other funding parties.	3.70	1.42	1	High
3	The fund functions within low business risks levels.	3.68	1.44	2	High
4	The fund functions within low financial risks levels.	3.53	1.45	3	Medium
5	The fund diversifies its investment activities.	3.43	1.36	4	Medium
6	The fund employs all the available financial sources in an optimal way.	3.23	1.31	5	medium
The Area as a Whole		3.46	0.48	-	Medium

Table No. (9) shows that the means ranged between (3.20- 3.70), with the first rank was for Item No. (2), providing: "The fund realizes returns in investment better than in any other funding parties", with a high degree. In the second rank, came Item No. (3), stating: "The fund functions within low business risks levels", with a (3.68) M and high degree. In the third rank, came Item No. (4), providing: "The fund functions within low financial risks levels", with a medium degree. However, the last rank was for Item No. (1), providing: "The financial results of the fund consistently show a profit", with a medium degree. The mean of the area "Investment Funds Performance Level" as a whole was (3.46) with a medium degree,

H3: There is a statistically significant effect ($\alpha \leq 0.05$) of the Managerial Empowerment dimensions (authority delegation, training, participation in decision-making, motivating the employees) on the investment funds performance in the Jordanian Public Universities.

For testing the third hypothesis of the study, the regression analysis was employed. Table No. (10) Explains this.

Table 10 : Regression Analysis of the Impact of the Managerial Empowerment on the Investment Funds Performance (N=40)

Independent Variable	T Value	T Statistical Significance	Beta	R	R2	f value	f Statistical Significance
Authority Delegation	11.694	0.000	0.370				

© 2014 Global Journals Inc. (US)

Motivation	12.051	0.000	0.305	0.94	0.97	162.458	0.00
Participation in Decision-Making	12.945	0.000	0.292				
Training	13.443	0.000	0.323				

The Dependant Variable: The Investment Funds Performance as a Whole.

Table No. (10) shows the following:

- There is a statistically significant Impact of the Managerial Empowerment of the investment funds' employees in the Jordanian Public Universities. r value was (0.97), r2 value was (0.94), and f value was (162.458) with a (0.00) statistical significance; indicative of the Impact of employees' managerial empowerment on the performance of the investment funds in the Jordanian Public Universities.
- Authority delegation area: t value was (11.694) with (0.00) statistical significance.
- Motivation area: there is a statically significant Impact of this area, as t value amounted (12.051) and (0.00) statistical significance.
- There is a statistically significant Impact of the area of participation in decision-making, as t value amounted (12.945) and (0.00) statistical significance.
- There is a statistically significant Impact of the training area, as t value amounted (13.443) and a (0.00) statistical significance.

Consequently, we can say that there is a clear Impact of managerial empowerment of the investment funds employees' on the performance of these funds. This study is in agreement with that of Meyerson & Dewettinck (2012), which indicated the existence of an Impact of applying empowerment on the performance of the telecommunication companies' employees in the United States of America. Furthermore, this study is in line with that of Radi (2010) which results showed a statistically significant relationship between the Managerial Empowerment and the creativity of the workers in Al-Qadisiah University, Iraq.

VIII. Results and Recommendations

a) Results

This study mainly aimed to identify the Impact of the Managerial Empowerment on the performance of the investment funds in the Jordanian Public Universities. The study concluded the following results:

1- The level of the Managerial Empowerment of the employees of the investment funds in the Jordanian Public Universities is medium. This is because "participation in decision-making" dimension ranked first, with a 3.41 mean. It was followed by "motivation" dimension, with 3.37 mean, "training" dimension, with 3.18 mean, and "authority delegation" dimension, with 3.16 mean.

2- The level of the investment funds performance level in the Jordanian Public Universities is medium, in general. Even though, these funds realize returns better than investment in other financing parties, with high mean amounting 3.70. The funds are functioning within low business risks levels, which showed a (3.68) high mean.

3- There is a statistically significant Impact of the Managerial Empowerment on the performance of the investment funds in the Jordanian Public Universities. It is found that the dimension with highest effect on the performance of these funds is the training dimension, followed by participation in decision-making, authority delegation, and finally the motivation dimension.

b) Recommendation

Based on the abovementioned results, the study recommends the following:

1- The investment funds in the Jordanian Public Universities should pay attention to raise the Managerial Empowerment level of the workers in these funds. This could be achieved through delegating them authorities and powers, providing appropriate training programs, motivating them at work, appreciating their efforts, and their participation in the managerial and investment decision-making.

2- The administration of the investment funds of the Jordanian Public Universities should assign special care to the diversification of their investment activities.

3- The administration of the investment funds of the Jordanian Public Universities should employ all available financial resources in a better method.

References Références Referencias

1. Abdul Hussein, Safa'a Jawad, (2012), "Impact of the Managerial Empowerment on the Job Satisfaction of the Workers in the Technical Education Board", Baghdad College Journal for Economical Sciences, University, No. (32), pp. 77-98.
2. Al-Douri, Zakariah Mutlaq, "Empowerment Management and Trust Economics", Al-Yazouri for Publishing, Amman, 2009, p.27.
3. Al-Otaibi, Saad Bin Marzouq, (2005), "Essence of Workers' Empowerment: Conceptual Framework', Worksheet, the 10th Annual Meeting of the Total Quality Management (TQM), King Saud University, Faculty of Administrative Sciences, p.1-42.
4. Al-Maani, Ahmad Ismail, "Impact of Empowering the Workers in Achieving Excellence for the Jordanian Institutions Participating in King Abdullah II Award

© 2014 Global Journals Inc. (US)

for Excellence", Unpublished Doctoral Dissertation, Amman Arab University for Higher Studies, Faculty of Administrative and Financial Higher Studies, Amman, 2008, p.15.

5. Al-Suwai'e, Omar & Al-Ta'ani, Hasan, (2013), "Managerial Empowerment and Its Relationship with the Job Satisfaction of the Principals of the Public Schools in Dammam Governorate, Kingdom of Saudi Arabia", Derasat, Educational Sciences, V. (40), Appendix (1), pp.305-327.
6. Al-Tarawneh, Mohammad & Mubaydeen, Mohammad, (2011), "Impact of the Managerial Empowerment on the Creative Behavior of the Workers in the Jordanian Commercial Banks", Derasat, Managerial Sciences, V. (28), No. (2), pp.480-505.
7. Bin Nafelah, Qaddour & Fallaq, Mohammad, (2011), "Impact of the Managerial Empowerment on the Employees' Creativity", Case Study on Jordan Telecom Group Co. (Orange).
8. Bourke, J.F., (1998) "Employee Empowerment", Dallas Business Journal, Vol. 21, No 46, pp564-578.
9. Clark, S., (1999) "Magic of Empowerment A blessing or a curse?" Business News, Vol. 44, No.1 ,pp547-561.
10. Dover, K., (2009) "A raiding empowerment traps", Management Review , Vol. 88 , No. 1.pp.75-88.
11. Elnaga, A., and Imran, A., (2014), "The Impact of Employee Empowerment on Job Satisfaction", American Journal of Research Communication, Vol. (2), No. (1), PP. 13-26.
12. Isimoya, A., and Bakarey, B., (2013), " Employees' Empowerment and Customers' Satisfaction in Insurance Industry in Nigeria", Australian Journal of Business and Management Research, Vol. (3), No. (5), PP. 1-11.Journal of Business Studies Quarterly, Vol. 3, No. 4, PP. 92-104.
13. Karim, F., Rehman, O., (2012), " Impact of Job Satisfaction, Perceived Organizational Justice and Employee Empowerment on Organizational Commitment in Semi-Government Organizations of Pakistan",
14. Mathews, R., (2003), "The Organizational Empowerment Scale", Personnel Review, Vol. 32, No. 3, MCB, Up Limited.
15. Meyerson, G., and Dewettinck, B., (2012), "Effect of Empowerment on Employees Performance", Advanced Research in Economic and Management Sciences, Vol.(2), PP.40- 46.
16. Nedd, N., (2004), "Employee Perceptions of work place Empowerment in Relation t Self – Reported Intent to Stay on The Job", Florida International University, U.S.A.
17. Noe, R.; Hollenbeck, J.; Gerhart, B., and Wright, P., (2008), Human Resource Management, McGraw Hill, Irwin.
18. Nusairat, Fareed and Al-Madi, Thaerah, (2011) "Impact of Managerial Empowerment on Applying the Total Quality Management (TQM) in University of Jordan Hospital: Case Study", Jordan Magazine in Business Administration, V. (7), No. (4), pp. 527-556.
19. Seibert, E., Silver, R., and Randolph, W., (2004), "Taking Empowerment to The Next Level: A Multiple – Level model of Empowerment, Performance, and Satisfaction, Academy of Management Journal, Vol. 47, No. 3. 332 – 349.
20. Radi, Jawad, (2010), "Managerial Empowerment and Its Relationship to the Workers' Creativity: Field Study on a Sample of the Employees of the Faculty of Administration and Economics", Al-Qadisiah Journal for Administrative and Economical Sciences, V. (12), No. (1), pp. 62-84.

© 2014 Global Journals Inc. (US)

Global Journal of Management and Business Research: D
Accounting and Auditing
Volume 14 Issue 5 Version 1.0 Year 2014
Type: Double Blind Peer Reviewed International Research Journal
Publisher: Global Journals Inc. (USA)
Online ISSN: 2249-4588 & Print ISSN: 0975-5853

Measures, Determinants and Commonality in Liquidity: Empirical Tests on Tunisian Stock Market

By Tarek Bouchaddekh & Abdelfatteh Bouri

Abstract- This paper examine empirically variables that can be significantly correlated with inter-temporal changes of measures of the individual's securities, for example: trading volumes, number of transactions, return, volatility, arrival of new information etc. Before a study of a sample of 40 quoted securities in Tunisian financial market, on the period of February 07, 2011 until January 31, 2013, results appear conclusive. First, as expected, depth has negative correlation with all spread measures. Besides, we observe perfect positive correlations between spread measures. This shows the validity of these liquidity measures on the Tunisian stock market. Furthermore, the results suggest that volume, return and arrival of new information contribute to explain significantly the inter-temporal changes of various measures of the securities liquidity. Finally, we can consider, probably, the arrival of new information as a common factor for the different liquidity measures for all stocks in our sample.

Keywords: microstructure, price formation, inventory costs theory, asymmetric information costs theory, commonality in liquidity.

GJMBR - D Classification : JEL Code : G20; G21; G01; G31; G32

MEASURESDETERMINANTSAND COMMONALITYINLIQUIDITYEMPIRICALTESTSONTUNISIANSTOCKMARKET

Strictly as per the compliance and regulations of:

© 2014. Tarek Bouchaddekh & Abdelfatteh Bouri. This is a research/review paper, distributed under the terms of the Creative Commons Attribution-Noncommercial 3.0 Unported License http://creativecommons.org/licenses/by-nc/3.0/), permitting all non-commercial use, distribution, and reproduction in any medium, provided the original work is properly cited.

Measures, Determinants and Commonality in Liquidity: Empirical Tests on Tunisian Stock Market

Tarek Bouchaddekh [α] & Abdelfatteh Bouri [σ]

Abstract- This paper examine empirically variables that can be significantly correlated with inter-temporal changes of measures of the individual's securities, for example: trading volumes, number of transactions, return, volatility, arrival of new information etc. Before a study of a sample of 40 quoted securities in Tunisian financial market, on the period of February 07, 2011 until January 31, 2013, results appear conclusive. First, as expected, depth has negative correlation with all spread measures. Besides, we observe perfect positive correlations between spread measures. This shows the validity of these liquidity measures on the Tunisian stock market. Furthermore, the results suggest that volume, return and arrival of new information contribute to explain significantly the inter-temporal changes of various measures of the securities liquidity. Finally, we can consider, probably, the arrival of new information as a common factor for the different liquidity measures for all stocks in our sample.

Keywords: microstructure, price formation, inventory costs theory, asymmetric information costs theory, commonality in liquidity.

I. Introduction and Background

Traditionally, asset pricing models (option pricing model [MEO], capital asset pricing model [CAPM] and arbitrage pricing theory model [APT]) are formulated under the hypothesis of a "perfect" market without frictions (transaction costs, asymmetry information costs etc.…). However, the empirical studies show that these frictions, known under «market microstructure", have an influence on price formation and on market liquidity.

In a more and more competitive environment, the financial markets try to guarantee an important quality: the liquidity. Indeed, the liquidity becomes an element of investment choice between the financial rooms that quote the same values of fact that the investor wishes to exchange without delay and without loss whatever is the volume.

In spite of the importance of concept of liquidity, researchers in finance don't have very successful to give him a standard measure. Indeed, liquidity depends on structure of market, nature of the exchange and other factors. Market microstructure literature has, at least since Demsetz (1968), based primarily on the bid-ask spread. This last is considered as a measure of transaction cost and market efficiency. It is admitted for a long period that the quoted bid-ask spread is inadequate for measuring market liquidity. According to Stoll (1985) and Grossman & Miller (1988), for example, the bid-ask spread measures liquidity precisely only when the market maker simultaneously crosses a trade at the bid and ask.

Hasbrouck (1993) discusses the defect of the traditional measures of transaction costs (such as bid-ask spread) and propose new improved measures of the liquidity: trading restrictions. Brennan, Chordia and Subrahmanyam (1998) measure liquidity by two variables: trading volume and securities rate rotation. Chordia, Roll and Subrahmanyam (2000) measure the liquidity by: quoted spread, effective spread and quoted depth. Several others measures are used, for example: volatility, lambda, CRT (cost of round trip trade), etc.

Several researches are interested to the identification of variables that can influence liquidity. To this stadium, several empirical studies have been done. Brennan and al (1998) identify a negative relation between returns and trading volume (considered as "proxy" of liquidity). Chordia, Roll and Subrahmanyam (2000) detect a strong correlation between trading volume and measures of liquidity (spread, depth etc.…). Other authors tried to examine the nature of relation between liquidity and others variables, such as: volatility, number of transactions, information, quoted tick size etc.

This paper proceeds to a sweep of an extensive literature permitting to examine the problematic relative to the identification of the determinants of liquidity. Our survey is incorporated in context of market microstructure aiming to describe the evolution of various measures of liquidity and study the factors that can be contributed to explain these different measures of securities quoted in continuous on the Tunisian stock market.

Our survey presents an institutional and methodological interest. On the first plan, it is about bringing a contribution to the reflection on the concepts, such as: theory of market microstructure, theory of bid-

Author α: Institute of Management of Gabes, Tunisia.
e-mail: trbl123d@voila.fr
Author σ : Faculty of Economics and Management of Sfax, Tunisia.

© 2014 Global Journals Inc. (US)

ask spread, measures and determinants of market liquidity.

On the methodological plan, we widened the approach of the event survey to the new parameters measuring liquidity, such as: spread and depth. Indeed, if this methodology is applied extensively to returns and volume, it is only used little for spread and depth.

The rest of the paper is organized as follow. Section 2 recalls and studies the literature of *"marketmicrostructure"* while insisting on the theory of the bid-ask spread. Section 3 defines market liquidity measures. Section 4 exposes theoretical and empirical works that study the influence of the strategically variables of microstructure (trading volume, returns, volatility, information, tick size etc.) on market liquidity. In section 5 we empirically study the evolution of the different measures of liquidity/illiquidity, variables influencing the market liquidity on the Tunisian stock market.

II. Market Microstructure Theory: Frictions and Dealer Heterogeneity

In the canonical model of efficient markets, price reflects all public information. In this model, agents are supposed to have homogeneous anticipations and frictions are negligible. Therefore market prices converge to the anticipated values. It is the example of asset pricing models (MEDAF, MEO, APT) that are formulated independently of transaction cost, dealers behaviour and market design.

In contrast to the model of efficient markets above, market microstructure theory interests to study the impact of the various market frictions and heterogeneity of anticipations[1]on price formation process. The central idea of the microstructure theory is that prices cannot be reflected all available information because of the variety of markets frictions (transaction costs, disagreement between dealers etc.). These frictions drive to have bid-ask spread prices that become, since Demsetz (1968), the central theme of the market microstructure theory.

The bid-ask spread is the difference between seller price (ask) and buyer price (bid). In the development of the theoretical components of the bid-ask spread, Glosten& Harris (1988) and others decompose the bid-ask spread into to parts. In the first part, due to informational asymmetries, the bid ask spread constitutes a potential loss indemnity supported by the market makers while he executed transaction with informed traders. In the second part, due to inventory control considerations, we can distinguish order processing costs (include exchange fees and taxes as well as the more immediate costs of handling transactions) and inventory holding costs components (compensation costs so that market maker accepts to detain no optimal portfolio).

III. Definitions and Measures of the Liquidity

a) *Definitions*

One of the first definitions of the liquidity comes to J.M Keynes (1930) according to which "an asset is as much more liquid if it is transformable in short-term currency and without loss ". This definition permits to put in evidence the two aspects of the liquidity: the temporal factor expressed by "short-term" and price factor translates by "without loss".

This definition can be adapted to financial markets: "A financial room is said liquid if intervening parties can buy and sell at all times an important quantity of securities to a fixed price ".

The previous definitions emphasize, always, the two dimensions of liquidity: time and cost. These two dimensions have tendency to evolve in an inverse sense: more the investor is hurried to achieve his transaction, more the cost generated by this one is important while more it is patient, more the cost of execution is advantageous.

Because she clothes several facets, the liquidity is a notion that is not simple to define and to measure. In their studies, researchers (Black [1971] and others) distinguish, generally, four dimensions of liquidity: *immediacy, depth, tightness and resiliency.*

The immediacy refers to the time that passes between the placing of a market order and its execution. *Depth* is the maximal amount of an operation for a determined spread; a market is *deep* if large orders can be executed without much effect on prices. *Tightness* refers to the cost of obtaining liquidity in the market and is directly measured by the bid-ask spread. *Resiliency* refers to the speed with which the bid and the ask schedules move back to their initial positions after an order has been executed.

b) *Liquidity measurements*

Some of the most interesting researches in microstructure theory deposit a problem of determination of a suitable measure of liquidity. It has been demonstrated that the choice of the "proxy" of liquidity is a very delicate task and depend on the room of quotation and the market design. In the literature, several measures of liquidity have been proposed, such as: trading volume, ratio of liquidity, the rotation rate, spread, depth, CRT, VNET, etc.

- Trading volume: Traditionally (Demsetz (1968)), liquidity is measured by the trading volume. This is maladjusted, because it disregards properties of the concept of liquidity (immediacy, tightness, depth and the resiliency).

[1] Heterogeneity of anticipations results in the presence of the informed traders, liquidity traders and market makers. Dealers are facing problem of asymmetric information when they display their prices ask/bid because they don't distinguish insiders to outsiders.

© 2014 Global Journals Inc. (US)

- Liquidity ratio: Bernstein (1986) defines it as the report of the absolute variations of prices to the trading volumes. It is considered as measure of liquidity degree of securities.
- Turnover: Turnover is generally used to measure the financial asset liquidity. It is equal to the number of securities exchanged divided by the number of securities in circulation. This measure is criticisable in the sense that it doesn't integrate features of the concept of liquidity.
- The ask-bid spread: the spread is generally considered as the best measure of the concept of liquidity. Under this term, we distinguish the quoted spread and the effective spread. Generally, the spread is considered as a measure of illiquidity.
- Depth: One of the most measures abundantly used as proxy of liquidity is depth. Depth is the number of units offered to "ask" price plus the number of units demanded at "bid" price. Depth can be measured by the number of securities exchanged (depth quantity) or by the number of monetary units (dollars depth). The depth is a quality offered by the electronic markets in the difference to floor-based markets, where we meet a big number of participants supplied of liquidity but incapable to execute some orders.
- Lambda: Kyle (1985) watch that the tie between prices and quantities in a note orders-book[2] can be used to appraise the degree of illiquidité of securities while supposing a linear relation between prices and quantities exchanged on the market; the lambda is the slope of the linear line.

$$\lambda = \frac{(ask - bid)}{(ask\ size + bid\ size)} \quad (1)$$

$$P = \mu + \lambda Q \quad (2)$$

P: price of securities,
Q: trading volume. Q> 0, if it corresponds to a purchase and Q <0, if it corresponds to a sale,
μ: represent the informational value of asset.

- *VNET:* Robert, Engle and Joe Lange (1997) propose a new intraday measure of market liquidity, VNET. This measure is constituted by the excess volume of buys or sells during events observed on the market defined by movements of prices. If price increase with a weak excess buys, the market is considered as illiquide, but if this same price increase with a large excess of buys, the depth would be more important. VNET is defined as follows:

$$VNET = \left| \sum_{i=1}^{n} d_i \times vol_i \right| \quad (3)$$

d: is an indicator of trading (buys =+1 and sells = -1),
vol: is the trading volume.

VNET measures the net directional volume that can be traded before prices are adjusted. If VNET converge to zero, the market is considered as being very liquid.

- CRT (the cost of round trip trade): Paul Irvine and George Benston (2000) propose an ex-ant measure of market liquidity, CRT. All low values of buyer prices "bid" and those of the high values of seller prices "ask" are respectively: P-1> P-2> P-3>….. and P1 <P2 <P3 <…. Quantities of securities offered and asked are represented by the vector: Q [… .Q-2 Q-1 Q-0 Q0 Q1 Q2….). The number of securities that we can sell it to mid price " is:

$$T(D) = \frac{2D}{P_{-0} + P_0} \quad (4)$$

[2]A note orders-book unites (by dates, volumes and categories) the waiting orders according to the asked price (on pouring it superior of the notebook) and the offered prices (on pouring it lower).

© 2014 Global Journals Inc. (US)

We define two indicators: I_k and I_{-k} that correspond to buyer and seller orders expressed in dollars respectively.

$$I_{-k}=\begin{cases} 1 & if \quad T(D)\geq\sum_{i=-0}^{-k}Q_i \\ \left[T(D)-\sum_{i=-0}^{-k+1}Q_i\right]/Q_k & if \sum_{i=-0}^{-k+1}Q_i\leq T(D)\leq\sum_{j=-0}^{-k}Q_j \\ 0 & if \quad not \end{cases} \quad (5)$$

$$I_k=\begin{cases} 1 & if \quad T(D)\geq\sum_{i=0}^{k}Q_i \\ \left[T(D)-\sum_{i=0}^{k}Q_i\right]/Q_k & if \sum_{j=0}^{k-1}Q_j\leq T(D)\leq\sum_{i=0}^{k}Q_i \\ 0 & if \quad not \end{cases} \quad (6)$$

$$CRT=\frac{\sum_{k=0}^{+\infty}(I_kP_kQ_k)-\sum_{k=0}^{+\infty}(I_{-k}P_{-k}Q_{-k})}{D} \quad (7)$$

We can say that market i offer a higher liquidity than market j if CRT_i (D) $<CRT_j$ (D).

IV. The Theoretical and Empirical Studies Relating of Actors Influencing Liquidity

The market design, regulators and management of investment can be all improved by the knowledge of factors influencing liquidity. A good understanding of these determinants can improve the confidence of investors on the financial markets and in this fact, to heighten the efficiency of resources allowance.

In the market microstructure literature, several researches (notably those led by Kyle (1985); Amihud and Mendelson (1986); Admati and Pfleiderer (1988); Harris (1995) as well as of others) note that liquidity is conditioned by several factors that will be studied in the following of the paper.

a) Information and insider's transactions impact

A set of empirical studies tempted to measure the impact of the asymmetric information on the bid-ask spread. Gajewski (1996) achieves a survey of event on data around announcements of earnings. Two types of situation of asymmetric information can appear. The first is that some investors can be informed exceptionally before the announcement, either because they collected information (financial analysts), either because they are insiders (majority shareholders, chief of enterprise…). The second type of situation of asymmetric information results the public information. Investors having a better capacity to interpret information arrange an informational advantage on others. Morse and Ushman (1983) study the evolution of the bid-ask spread around the quarterly result announcement on the period 1973-76 on a composed sample of 25 securities quoted on the OTC (Over The Conter). The authors don't put in evidence meaningful change of the size of the bid-ask spread around the date of quarterly earnings announcement.

To study the impact of insiders transactions on liquidity, Lee, Macklow & Ready (1993) study the evolution of the quoted spread and quoted depth (considered as "proxy" of liquidity) on 53 intervals of a half-hour where makes himself the announcement of earnings. The empirical results reinforce the hypothesis that the intervention of insiders results in the widening of quoted spread and therefore a deterioration of the market liquidity. In the goal to verify this prediction on the Paris Bourse, AnnaïckGuyvar'ch (2001) studies empirically the evolution of the quoted spread following insiders transactions. This survey shows that the quoted spread enlarges on the days where insiders achieve their criminal transactions, and recover his normal level on the end of the quotation session.

b) Liquidity and returns

The idea that measures of liquidity can influence returns is well accepted. Several studies (Amihud and Mendelson,1986) show that expected returns are in decreasing function of liquidity because investors must

© 2014 Global Journals Inc. (US)

be compensated for the higher transaction costs that they bear in less liquid markets.

Amihud and Mendelson (1986) leave of the hypothesis that investors require an elevated expected return for an enlarged spread to compensate transaction costs. Thus, investment decisions don't depend solely on specific risk hound to securities, but also to their liquidity risk. Besides, it is important to note that when investors can reduce a risk bound to the securities by the diversification of his portfolio or by techniques of hedging, it is difficult to make it to eliminate illiquidity costs[3] .

In order to support the idea that liquidity has a measurable effect on returns, Amihud and Mendelson (1986) examine the importance of introduction of liquidity (measured by the bid-ask spread) in asset pricing. They test the hypothesis that expected returns are an increasing concave function of ask-bid spread. Empirical result, on the NYSE/AMEX common stocks in the period 1961-1980, indicate there is a significantly positive relation between returns and the bid-ask spread.

These results have a number of implications for the investment and for the portfolio choice. One of implications, is that investments of weak liquidity generate some elevated returns for their holders.

c) Liquidity and tick size

Tick size constitutes the minimum price variation for quoting and trading stocks. It is determined of two ways: either in percentage of prices level, which limits his impact, either by authorities of the market; independently of prices. A number of papers examine theoretically and empirically the effect of a tick size reduction on market liquidity.

Harris (1994) applies that a reduction in tick size should reduce liquidity; since the tick size represents the subsidy paid to liquidity providers. Specifically, in the wake of a reduction tick size, liquidity providers could choose to reduce their interventions on the market. Therefore, market liquidity provision decrease.

Empirically, several studies done on the international markets (Stockholm Stock Exchange band others) confirm the theoretical survey of Harris (1994), others invalidate it. Engel (1997) argues that a small tick size increase liquidity by allowing for a small bid-ask spread. Niemeyer and Sandâs (1994) also the arguments in Harris (1994), showing that the tick size is positively related to the bid-ask spread and negatively related to trading volume.

d) Liquidity and trading volume

The takes in account of volume as resulting of the strategic intervention of operators puts in evidence the importance of studies for the impact of trading volume on liquidity. The empirical results recorded show that researchers were in situation of conflict.

Chordia, Roll and Subrahmanyam (2000) recommend a positive relation between trading volume and liquidity; negative relation (positive) between trading volume and quoted spread (quoted depth). These results confirm the strategic behavior of operators that choose to negotiate on the moments where the securities are most liquid (narrow spread and elevated depth).

Of their part, Clyman, Allan and Jaycobs (1997) reject the idea that a strong liquidity requires an elevated volume. They appraise that, on a liquid market, we must predict a symmetrical variations of the bid and ask prices, but on an illiquid market these variations being asymmetric. This is imply that only the bid price go up toward the ask price or that only the ask price lower toward the bid price.4.5

e) Liquidity and volatility

The spread is also related to the volatility. This predicts the inventory and asymmetry information models. Several studies showed a negative relation between liquidity and prices volatility (Domowitz, Glen and Madhavan (2000) and others…). In particular, it has been observed that an increase of volatility takes, generally, to an enlargement of the bid-ask spread. Theoretically, this result can be explained by the fact that in period of a strong volatility, market makers are going to require a more elevated return (enlargement of the bid-ask spread) to compensate the free loss of an unexpected prices variations.

f) Seasonality in liquidity

The first empirical studies describing the evolution, in sitting, of liquidity measures have been achieved on the American stocks markets. Handa (1992) analyzes a behavior of an intraday spreads calculated at intervals of a half-hour for 1902 quoted securities on the NYSE/AMEX. He observes a curve in U of quoted spread of market makers during the quotation sitting.

In the goal to test seasonality in liquidity, Chordia, Roll and Subrahmanyam (2000) show that the liquidity, in NYSE, is affected by days of the week. They prove that Tuesdays, Wednesdays and Thursdays have a negative and significant effect on the spread and a positive and significant effect on the depth. Specifically, they observe that Tuesdays have some more elevated coefficients in absolute value than the other days of the week. The authors show, also, that liquidity decreases in Friday and that depth has tendency to increase around the holiday days.

[3] Let's note that investors can eliminate no systematic risk by the diversification and can form a portfolio with zero beta to eliminate the systematic risk (bound in market). However, investors cannot eliminate illiquidité costs.

© 2014 Global Journals Inc. (US)

V. Application to the Tunisian Stock Market

The Tunisian stock market knew since 14 November 1994 (law n° 14-117 carrying reorganization of the financial market) mutations characterized by the following criteria: security (guarantee put in room by mediators), transparency and necessity of a diffusion of information in real time and liquidity that constitutes criteria of judgment of the market. This reform can contribute to facilitate the activity of exchange and to improve the liquidity on the Tunisian stock market.

Our empirical survey was integrated in the domain of market microstructure aiming to describe the evolution of the different measures of the liquidity and to study the impact of factors that can contribute to explain these different measures of quoted stocks in continuous on the Tunisian stock market.

Data concerning the daily prices, the nearest preceding bid and ask prices, number of shares the specialist had guaranteed to trade at the bid and ask quoted , the trading volume and the number of trades are provided by a financial intermediary (broker). It is to note that we are going to exclude Saturdays, Sundays, the holiday and days for which stocks have not been quoted. The study is conducted on the period going February 07, 2011 until January 31, 2013. The sample is constituted by 40 quoted securities in Tunisian stock market.

a) Evolution of liquidity measures on the Tunisian stock market

The first stage of our survey consists to calculate for four liquidity measures the weekly average of: quoted spread (S), proportional effective spread (SP), effective spread or lambda (SE) and quoted depth (DE). Measures of the liquidity used are formulated as follows:

- The quoted spread: S = Log(Ask/Bid) ; (where Ask, is the seller price and Bid, is the buyer price).
- The proportional effective spread : $S_p = 2\,\dfrac{\left|Log(P) - \left[Log(ask) + Log(bid)\right]/2\right|}{Log(P)}$

  (Where P is the price shares).
- The depth : DE = Log(Q ask) + Log(Q bid)
  (Where Q ask and Q bid denote the quantity guaranteed available for trade at the quotes ask and bid)
- Another measure of liquidity (lambda) proposed by Handa (1992) that combines two measures of liquidity, quoted spread and depth, : $SE = \dfrac{Log(ask/bid)}{Log(Q_{ask}) + Log(Q_{bid})}$

Second, we try to test the hypothesis that all measures of spread are positively correlated with each other across time and negatively correlated with depth.

Table 1 documents the correlations between the aggregate market liquidity measures

Table 1 : Correlations between liquidity market measures

	SPM	SM	SEM	DEM
SPM	1			
SM	0.9203404	1		
SEM	0.9315732	0.971523	1	
DEM	-0.156081	-0.23458	-0.29524	1

As expected, depth (DEM) has negative correlation with all spread measures. Besides, we observe perfect positive correlations between spread measures. This shows the validity of these liquidity measures on the Tunisian stock market.

b) Influence of market liquidity on individual stocks liquidity

We first estimate autoregressive model of the liquidity proxy for individual stocks and examine whether the residuals from the autoregressive model are correlated for the different individual stocks.

$$L_{i,t} = \chi_{0,i} + \chi_{m,i}\, L_{i,t-1} + \xi_{i,t} \quad (8)$$

Li,tet Li,t-1 are the liquidity measures for stock i at the dates t and t-1.

Note that the 40 individual stocks (or regressions for each liquidity measure) are arranged alphabetically by stock name. So we run 39 time series regressions between adjacent residuals;

$$\xi_{i+1,t} = \kappa_{i0} + \kappa_{i1}\xi_{it} + \theta_{it} \quad (9)$$

- κ_{i0} *and are estimated coefficients.*

© 2014 Global Journals Inc. (US)

- *ξ_{it} is an estimated disturbance for stock in equation (1).*

We interpret positive correlations for thirty four regressions among thirty nine for each liquidity measures. The average correlation is to 0.23 for Depth, 0.36 for quoted spread, 0.31 for proportional effective spread and 0.33 for lambda. This result is compliant to Huberman & Halka (2001) and proves the presence of the common liquidity factors in Tunisian stock market.

These common factors can be associated to factors that can vary with these different measures, such as: trading volume, number of trades, return, volatility and lag variable of liquidity measure, etc…

According to Chordia, Roll and Subrahmanyam (2000), we going, initially, to estimate simple "market model" time series regressions; liquidity variables for an individual stock regressed on market measures of liquidity:

$$L_{i,t} = \beta_{0,i} + \beta_{m,i} L_{m,t} + \mu_{i,t} \quad (10)$$

$L_{i,t}$et $L_{m,t}$are the liquidity measures for stock i and market respectively.

$\beta_{m,t}$, is sensibility of stock liquidity to the aggregate market.

$\mu_{i,t}$, is the innovations.

The estimation in (10) by OLS method[4] clears a Durbin-Watson value near to unit for all measures of liquidity. This implies the existence of positive auto-correlations in innovations. These auto-correlations are in order 1[5] for all stocks liquidity measures in our sample.

To solve this problem of auto-correlations in innovations, we estimate model (11), while using the Eviews 6 Software that permits to estimate by OLS method the auto-correlation coefficients:

$$L_{i,t} = \beta_{0,i} + \beta_{m,i} L_{m,t} + \rho \mu_{t-1} + \nu_t \quad (11)$$

ρ, *are* the auto-correlation coefficients in innovations between dates t and t-1.

Results of the estimation of market model in (11) are very powerful. Indeed, all coefficients are positive, but 11% are only not significant. This proves that the individual stock liquidity was strongly correlated with aggregated market liquidity, what again reinforces the hypothesis of the validation of a market model adapted to different liquidity measures on Tunisian stock market.

It is to note that, the explanatory power of this last model is not important. Indeed, the average determination coefficients for the different measures of the liquidity are 18% for the quoted depth, 28% for the quoted spread, 25% for the effective spread and 29.4% for the lambda. This is can be justified by the existence of noise or that it exists other factors can influenced individual stocks liquidity.

c) Empirical studies on individual determinants of the liquidity on the Tunisian stock market

In the literature of market microstructure many study reinforces the hypothesis according to which the liquidity is conditioned by the strategic indicators measuring the performance of market, among these factors we distinguish: trading volume, number of trades, return, volatility and lag variable of liquidity measure, etc.

i. *Trading volume*

The effect of trading volume on the spread is ambivalent. Trading volume is carrier of news that market maker ignored; in this case, he enlarges his spread to hedge his position. However, by reason of the competition, he could be obliged to reduce spread and play on the volume. With regard to the effect of trading volume on the depth, the different studies detected a positive relation.

To study the relation between liquidity and trading volume (measured in number of stocks exchanged), we estimate equation (12):

$$L_{i,t} = a_0 + a_1 V_{i,t} + u_{i,t} \quad (12)$$

$V_{i,t}$,is the logarithm of trading volume for stocks at the time t.

To estimate this equation we use Panel data for 40 stocks quoted in continuous and most active on the Tunisian stock market on the period going from February 07, 2011 to January 31, 2013, either 104 weekly observations for each stock. Therefore, in whole, we have 4160 observations for each variable.

Estimation of equation (12) by the OLS method[6] proves the existence of positive auto-correlations in innovations (Durbin-Watson near of 1). To solve this problem we estimate, rather, equation (13):

$$L_{i,t} = a_0 + a_1 V_{i,t} + \rho u_{i,t-1} + \varepsilon_{i,t} \quad (13)$$

Results of estimation are very powerful and reject the hypothesis of an ambivalent relationship between liquidity and trading volume. Indeed, we detect a negative and significant relationship between the different illiquidity measures (quoted spread, proportional effective spread and lambda) and the

[4] Note that all measures of liquidity are stationary.

[5] We used an econometric method that consists in adding to the regression (5), AR(1) AR(2)…then we tested the significant power of the auto-correlations coefficients . The result proves that only the coefficients of order 1 are significant.

[6] It is to note that the trading volume expressed in logarithm is stationary. In the same way, all other variables that we are going to use are thereafter are stationary, except variable «price (P)" that is stationary in difference (DS).

© 2014 Global Journals Inc. (US)

trading volume. Besides, we detect a positive and significant relation between depth and trading volume with a t-student of 6.2. This positive and significant relation between liquidity and trading volume on the Tunisian stock market confirms the strategic behaviour of operators that chooses to negotiate just when stocks become very liquid (narrow spread and elevated depth).

ii. *Number of trades*

In order to study the link between liquidity and number of trades we estimate, using data Panel, by the OLS method equation (14):

$$L_{i,t} = b_0 + b_1 N_{i,t} + v_{i,t} \quad (14)$$

$N_{i,t}$, is the logarithm of number of trades for stocks i at a date t.

To solve the problem of mistake auto-correlation in innovations, we estimate rather equation (15):

$$L_{i,t} = b_0 + b_1 N_{i,t} + \rho v_{i,t-1} + \eta_{i,t} \quad (15)$$

Results of estimation show an ambiguousness relationship between liquidity and number of trades. On the one hand, we observe a negative and significant relation between illiquidity measures and number of trades. On the other hand, we observe a negative and significant relationship between depth and number of trades. The existence of a negative relation between the depth and number of trades can be explained by the tendency of intermediaries in stock market to exercise some trading in block because the Tunisian stock market lacks of informed traders.

iii. *Return*

In our empirical investigation we estimate by OLS method equation (16):

$$L_{i,t} = c_0 + c_1 R_{i,t} + \rho v_{i,t-1} + \eta_{i,t} \quad (16)$$

$R_{i,t} = \text{Log}(P_t / P_{t-1})$, is the return for stock i, at a week t.

Estimation results document a positive and significant relationship (but insignificant, solely, for the quoted spread) between return and stocks liquidity. Indeed, we observe, on the one hand, some negative coefficients for the different illiquidity measures; it is of - 0.013 with a t-student of - 0.64 for the quoted spread, - 0.045 with a t-student of - 4.54 for the proportional effective spread and of - 0.006 with a t-student of - 2.17 for the lambda. On the other hand, we detect positive and significant coefficients between the quoted depth and return. this is in contradiction with the result of Amihud & Mendelson (1986) and Brennan, Chordia & Subrahmanyam that recommend that liquid stocks procure to their holding weak return. This positive relation between liquidity and return on the Tunisian market can be explained by the tendency of intermediaries in stock market to negotiate stocks that procure the most elevated returns.

iv. *Volatility*

By reason of the absence of a sufficient number of quotations inside the week to calculate prices volatility, we use an approach that consists to estimate the volatility from the past prices. There is little evidence that stock market varies systematically with time. There is also strong evidence that ARCH models (Autoregressive Conditional Heteroskedasticity; Engel, 1982) are good descriptions of time-varying volatility in stock prices. Review article such Bollerslev (1986) documents the effective application of ARCH(p) and GARCH(p,q) (General Autoregressive Conditional Heteroskedasticity) models to financial time series across a wide variety of markets.

In our investigation we use GARCH (1.1) model to estimate volatility:

$$\begin{cases} Log(P_t) = \alpha_0 + \alpha_1 Log(P_{t-1}) + u_t & (a) \\ h_t = a_0 + a_1 u_{t-1}^2 + a_2 h_{t-1} & (b) \end{cases} \quad (17)$$

In equation (17. a), $\alpha_0 = E[\text{Log}(P_t \setminus F_{t-1})]$ is the conditional average of information in t-1 represented by the whole F_{t-1} and u_t designates the shock.

In equation (17. b), $h_t = E_{t-1}(u_t^2 \setminus F_{t-1})$ is the conditional variance to F_{t-1}. By definition, it is the expected component of the volatility. The equation (b) is a modelling of this component that is then function of the passed innovations u_{t-1} (a_1 is interpreted as the size of this shock) and of the passed volatility h_{t-1} (a_2 is an indicator of persistence).

To estimate the volatility by the GARCH (1, 1) model, we, first, examine the distributions of stocks prices using the Eviews 6software. We notice that these distributions depart of the normal distribution as indicated by tests of skewness and kurtosis. The test of skewness rejects significantly the symmetry (H0: sk = 0) with an average value of 0.63. The test of kurtosis rejects the hypothesis of a normal distribution (ku =3) with a value of 2.13. Besides, the statistical of Jarque-Bera[7] is 8.05 with a near probability of zero. Therefore, we reject

© 2014 Global Journals Inc. (US)

the hypothesis of a normal distribution of the stocks prices.

The estimation of equation (a) by the OLS method puts a problem of a unit root for all stocks in our sample. The Dickey-Fuller test indicates that distributions are deference stationary (DS). Therefore, we estimate for every stock, the following model by the ARCH method:

$$DLog(P_t)=a_0+u_t \quad (18)$$

Once this last model is estimated, using the ARCH estimation method with Eviews 6 software, we generates for every stock the data of the volatility $h_{t.1}$.

$$h_t=a_0+a_1\mu_{t-1}^2+a_2h_{t-1} \quad (19)$$

Estimation results of model (19) indicate that current volatility depends of lagged volatility h_{t-1} (GARCH), whose coefficient a_2 is positive and significant for most stocks. Besides, the results suggest that current volatility depends of lagged squared innovations, u_{t-1}^2 (ARCH), whose coefficient a_1 is positive and significant.

Once, the volatility is estimated, we examine their influence on the liquidity. Therefore, it is necessary to estimate the following model while using Panel data[8]:

$$L_{i,t}=d_0+d_1h_{i,t}+\rho w_{i,t-1}+\psi_{i,t} \quad (20)$$

Estimation results in equation (20) show, on the one hand, that volatility is positively related to spreads (quoted spread and lambda). This can essentially be explained by the strategic behaviour of traders that choose to widen spread to compensate the risk of a strong prices volatility in them disfavour. On the other hand, results show a negative relationship, but not significant, between depth and volatility. This shows the absence of a strong relationship between liquidity and volatility on the Tunisian stock market.

v. *Past information*

To judge the influence of the past information on the stocks liquidity, we introduced a lagged variable because liquidity at time t-1 has an influence on the liquidity at time t. This influence is essentially owed to the incorporation in prices and volumes that are attached to information revealed by the past transactions. Some supplementary lags don't contribute to increase the explanatory power of the model. Therefore, liquidity follows an auto-regressive process of order 1.

$$L_{i,t}=e_0+e_1L_{i,t-1}+\gamma_{i,t} \quad (21)$$

Using Panel data, estimation results make appear that past liquidity contributes strongly to explain current liquidity. Indeed, coefficients of the past liquidity are positive and significant for all liquidity measures.

This shows the importance of the past information to explain the behaviour of liquidity of stocks quoted in continuous.

d) Determinants of the common movements in liquidity on the Tunisian stock market

To examine the hypothesis of the presence of common factors in liquidity, we based on previous results indicated that the trading volume, return and lagged liquidity measures contribute significantly to explain the behaviour of liquidity measures of all stocks quoted in continuous on the Tunisian stock market. Therefore we are going to examine if these variables can be considered as common factors in liquidity.

Therefore, we estimate, using panel data for each group, the following regression (pooled cross-section time series):

[7] $JB=((N-h)/6)*[S^2+1/4(K-3)^2]$. Where, S is the skewness, K is the kurtosis, h is the number of parameters to estimate and N design the number of observations.

[8] It is to notice that we lost for every stock the first observation. To the whole, we lost 40 observations for each variable; therefore we dispose of 4160 observations.

© 2014 Global Journals Inc. (US)

$$L_{i,t} = c_{i,t} + \alpha_i V_{i,t} + \beta_i R_{i,t} + \chi_i L_{i,t-1.} + \varepsilon_{i,t} \quad (22)$$

$L_{i,t}$et $L_{i,t-1}$ are the liquidity measures for stock i at the weeks t and t-1.

$V_{i,t}$, is the logarithm of trading volume for stocks at a week t.

$R_{i,t}$ = Log (P_t / P_{t-1}), is the return for stock i, at a week t.

In tables 2 we report estimates coefficients for the regressions of our four liquidity proxies on the explanatory variables.

Table 2 : Determinants of the common movements in liquidity

PANEL		C	V	R	*S(-1)*	R^2
S		0.017485	-0.001276	-0.026352	0.254798	0.129083
	t-st	*(5.502999)**	*(-4.221660)*	*(-0.652348)*	*(5.456235)*	
SP		0.005576	-0.000432	-0.0756348	0.328254	0.219406
	t-st	*(6.893580)**	*(-3.796875)*	*(-3.65234)*	*(7.489629)*	
DE		2.712189	-0.045168	30.79190	0.488769	0.318134
	t-st	*(3.276671)**	*(-1.135465)*	*(5.6542387)*	*(13.00661)*	
SE		0.001559	-0.000146	-0.010545	0.374519	0.255791
	t-st	*(5.082276)**	*(-4.906551)*	*(-2.101210)*	*(8.489462)*	

- *Trading volume:* Table 2 shows that trading volume is negatively and significantly correlated to the different measures of illiquidity. However, the depth is negatively correlated with trading volume, but this relationship is not significant (t-student of -1.13).
- *Return:* Table 2 reveals that return is negatively correlated to the quoted spread (with a t-student of -*0.652348*), to the proportional effective spread (with a t-student of -*3.65*) and to the lambda (with a t-student of -2.10). Besides, return is positively and significantly correlated to the quoted depth (with a t-student of *5.65*).
- *Past information:* Tables 2 indicates that, even if we account for volume, return, the past information (represented by the lagged liquidity variable) remains a strategically variable that contributes strongly and significantly to explain the behaviour of the different liquidity measures of stocks.

Thus, our results contradict the hypothesis that volume and return contribute strongly to explain the behaviour of the liquidity. Therefore, volume and return don't constitute a common factor for the different liquidity measures of the stocks quoted in continuous on the Tunisian stock market.

In opposite, we can consider, probably, the past information as a common factor for the different liquidity measures for all stocks in our sample quoted in continuous on the Tunisian stock market.

VI. Conclusion

Literature of market microstructure proposed a diversity of measures, such as: the quoted spread, proportional effective spread, lambda, quoted depth … In the goal to judge the validity of these measures on the Tunisian stock market, we tried to verify the hypothesis that different illiquidity measures (quoted spread, proportional effective spread, lambda) vary in inverse sense with the quoted depth. Our survey led on 40 stocks quoted in continuous reinforces this last hypothesis for the individual stocks as well as for the whole of the market.

The main goal of this paper was to test empirically the hypothesis of the presence of variables influencing liquidity stocks quoted in continuous on the Tunisian stock market.

The most important empirical results find that:

- It exist a "market model" for liquidity.
- Trading volume has positive and significant relationship with the stocks liquidity.
- It exist ambiguousness as for the influence of the number of trades on stocks liquidity.
- Return is positively and significantly correlated with stocks liquidity.
- Relationship between liquidity and the volatility is not significant.
- Liquidity is auto-regressive of order 1. Indeed, the lagged liquidity has strong contribution to explain the current liquidity. So, we can consider, probably, the past information as a common factor for the different liquidity measures for all stocks in our sample quoted in continuous on the Tunisian stock market.

References Références Referencias

1. Admati, Anat R., and Paul Pfleiderer, 1988, "A Theory of Intraday Trading Patterns", Review of Financial Studies 1, 3-40.
2. AmihudetMendelson (1986a),"Liquidity and stock return", Financial Analysts Journal (42), pp. 43-48.

© 2014 Global Journals Inc. (US)

3. AmihudetMendelson (1989),"The effects of beta, bid-ask spread, residual risk on stock returns", Financial Analysts Journal (42), pp. 479-486.
4. Amihud, Mendelsonet Wood, 1990. "Liquidity and the stock market crash". The Journal of Portfolio Management.
5. AnanthMadhavan. "Market Microstructure: A survey ".Marshall School of business. University of southern California Los Angelos, CA 90089-1427. (213)-740 6519. Marsh 16, 2000.
6. AnnaïchGuyvarc'h."Impact des transactions d'initiéssur la liquidité". Banque & Marchés n°53 .pp22-33. Juillet-Août 2001.
7. Bagehot (1971), "The only game in town". Financial Analysts Journal (27), 12-14.
8. BellalahMondher et Yves Simon, " Options, contrats à terme et gestion des risques". Collection Gestion, Economica. Chapitre 14 et 15, 1999.
9. Black, 1971. "Toward a fully automated stock exchange". Financial Analysts Journal (27), 28-35. 1971.
10. Brennan etSubrahmanyam "Market microstructure and asset pricing on the compensation for illiquidity in stock returns". Journal of financial economics, 41 (1996).
11. Chordia, Roll and Subrahmanyam "Commonality in liquidity". Journal of financial economics, 56 (2000).
12. Chordia, Subrahmanyam et Anshuman (2001)," Common Determinants of Bond and Stock Market Liquidity: The Impact of Financial Crises, Monetary Policy, and Mutual Fund Flows", The Anderson School, University of California at Los Angeles.
13. Clymanet Jacobs. "Liquidity without volume". Journal of Futures Markets (18), 281-296. 1998.
14. Copeland etGalai. "information effects on the bid-ask spread". Journal of Finance (38), 1457-1469. 1983.
15. [Demsetz H. 1968, "The cost of transacting". Quarterly Journal of Finance (45), 33-53.
16. Frinoet Hill "The impact of electronic trading on liquidity". Finance discipline, School of Business, University of Sydney, NSW, 2006.
17. Glosten, Lawrence R., and Paul Milgrom, 1985 "Bid, ask, And Transaction Prices in a Specialist Market With Heterogeneously Informed Agents". Journal of Financial Economics 14, 71-100.
18. Goldstein, Kenneth etKavajecz (2000), "Eighths, sixteenths and market depth: changes in tick size and liquidity provision on the NYSE". Journal of financial economics (56) 125-149.
19. GurHuberman and DominikaHalka "Systematic Liquidity". The journal of financial research. Vol. 24. n°. 2. Summer (2001).
20. Harris, 1994. "Minimum price variation, discrete bid-ask spread and quotation sizes". Review of Financial Studies (7), 149-178.
21. Hasbrouck and Seppi "Common factors in prices, order flows and liquidity". Working paper, December, 31, 1998.
22. Hasbrouck, J. "Assessing the quality of the securities market: A new approach to transaction cost measurement". Review of financial studies (6), 191-212. 1993.
23. Ho et Stoll. "Optimal dealer pricing under transactions and return uncertainty". Journal of Financial Economics (9), p99-117. 1981.
24. Keynes J.M, (1930). "Treatise on money". Macmillan, London.
25. Kyle, Albert, (1985), "Continuous Auctions and Insider Trading", Econometrica 53, 1315-1335.
26. Mannaî Samir. (1997) "De la microstructure des marchés en général à la liquidité en particulier". Edition Economica. 1997.
27. O'Hara, (1987). " the microstructure of the market making". Journal of Financial and Quantitative Analysis, (21) 361-376.
28. Paul Irvine, George Benston. "Liquidity Beyond the Inside Spread: Measuring and using information in the limit order book.".Goizueto Business school, Emory University, Atlanta,GA,30322.July, 2000.
29. [29]Robert F. Engle and Joe Lange. "Measuring, forecasting and explaining time varying liquidity in the stock market". University of California San Diego. May1997.
30. Roll Richard (1984), "A simple implicit measure of the effective bid-ask spread". Journal of Finance (39), 1127-1139.

© 2014 Global Journals Inc. (US)

This page is intentionally left blank

© 2014 Global Journals Inc. (US)

Global Journal of Management and Business Research: D
Accounting and Auditing
Volume 14 Issue 5 Version 1.0 Year 2014
Type: Double Blind Peer Reviewed International Research Journal
Publisher: Global Journals Inc. (USA)
Online ISSN: 2249-4588 & Print ISSN: 0975-5853

Factors Associated with Audit Reports in Saudi Arabia

By Dr. Qasim Mohammad Zureigat

College of Business and Economics, Qassim University, Saudi Arabia

Abstract- Considering audit reports as the results of any audit task and their importance in communicating an auditor's opinion about the credibility of financial statements, this study aims to investigate the effect of firm-related factors and auditor-related factors on the kinds of audit reports in Saudi Arabia, which is considered one of the biggest markets in the MENA region. Data for 153 listed companies are employed in the analysis, collected as at the end of 2013. A multiple regression model is developed taking audit reports as the dependent variable. The results indicate that the auditor's size, firm size, and leverage significantly affect audit reports, with large auditors tending to issue modified audit reports more than smaller auditors, and small companies and leveraged companies being more likely to receive modified audit reports. Neither profitability nor the age of the company (as a listed company) affects audit reports. These results are consisted with the literature and the nature of the Saudi stock market formally established in 2003.

Keywords: audit report, auditor size, modified reports, saudi, listed companies.

GJMBR - D Classification : JEL Code : M40

FACTORSASSOCIATED WITHAUDITREPORTSINSAUDIARABIA

Strictly as per the compliance and regulations of:

© 2014. Dr. Qasim Mohammad Zureigat. This is a research/review paper, distributed under the terms of the Creative Commons Attribution-Noncommercial 3.0 Unported License http://creativecommons.org/licenses/by-nc/3.0/), permitting all non-commercial use, distribution, and reproduction in any medium, provided the original work is properly cited.

Factors Associated with Audit Reports in Saudi Arabia

Dr. Qasim Mohammad Zureigat

Abstract- Considering audit reports as the results of any audit task and their importance in communicating an auditor's opinion about the credibility of financial statements, this study aims to investigate the effect of firm-related factors and auditor-related factors on the kinds of audit reports in Saudi Arabia, which is considered one of the biggest markets in the MENA region. Data for 153 listed companies are employed in the analysis, collected as at the end of 2013. A multiple regression model is developed taking audit reports as the dependent variable. The results indicate that the auditor's size, firm size, and leverage significantly affect audit reports, with large auditors tending to issue modified audit reports more than smaller auditors, and small companies and leveraged companies being more likely to receive modified audit reports. Neither profitability nor the age of the company (as a listed company) affects audit reports. These results are consisted with the literature and the nature of the Saudi stock market formally established in 2003.

Keywords: audit report, auditor size, modified reports, saudi, listed companies.

I. Introduction

As the result of any auditing process, the audit report provides valuable information for all those interested in the financial statements through the content message about the fairness of the representation included in the financial statements, providing a tool to increase the credibility of the financial statement (Maggina & Tsaklanganos, 2011). Habib (2013) argues that the audit report is a significant communication tool that auditors employ to inform users of the report about an auditor's work, suggesting that an audit report can considered a multi-functioning communication tool that reports the financial statement and the quality of the audit function at the same time. The value of the information content of audit reports can be noted when considering the kinds of audit reports that are listed in the International Auditing Standards (IAS), influencing auditors to express their opinions based on specific forms: unqualified opinions, explanatory language, qualified opinions, adverse opinions, and disclaimer of opinion.

Audit reports affect the decisions of the users of financial statements through providing relevant information on whether the financial statements have been prepared in accordance with the adopted accounting standards or not (Zureigat, 2010). In Saudi Arabia, two kinds of accounting and auditing standards are adopted: the International Financial Reporting Standards (IFRS) and International Auditing Standards (IAS), which are applied in the financial sector (banks and insurance companies), and the Saudi Accounting Standards and Saudi Auditing Standards, adopted by other companies. This leads to a "noisy" environment in the accounting and auditing profession.

The Big Four audit firms (Ernst & Young, Deloitte, PwC, and KPMG) hold around 80% of the market share in Saudi Arabia due to the high level of trust in their audits and the argument that they provide high quality audits. However, in 2014, there was an accounting scandal in Saudi Arabia following the announcement that one of the largest Saudi telecommunications companies audited by one of the Big Four audit firms had disclosed inflated profits. This scandal was revealed by the internal auditor and led to a huge market reaction that resulted in a drop in the share price of the company of 35% over a couple of days. This incident damaged investor trust in the audit profession and made the quality of the Big Four auditors questionable, especially as internal information was disclosed by the media concerning the involvement of both the management and the auditor in the issue. This led to new questions being asked about factors that affect auditors' reports in Saudi Arabia.

Tina and Nikola (2012) assert that audit reports and related factors have become topics of particular interest since the start of the global financial crisis due to thee mp has is on management attitudes toward audit reports and financial statements. This study aims to explore factors that may affect audit reports in one of the largest emerging economies in the MENA region, namely Saudi Arabia, based on significant signals about the quality of audits and the motivations for providing specific kinds of audit reports. The research takes 2013 as the year of the study as this was the year in which the events resulting in the scandal that affected trust in the auditing profession occurred. Firm-related factors and auditor-related factors are investigated as having the potential to affect the auditors' judgments and opinions (Habib, 2013; Maggina & Tsaklanganos, 2011; Martens et al., 2008; Masyitoh et al., 2010). This work contributes to the auditing literature as one of leading studies on this topic in Saudi Arabia for the time at which there were signals of an accounting and auditing scandal. Also, it provides valuable information for regulators,

Author: College of Business and Economics Qassim University.
e-mails: qasimmz@yahoo.com, 3903@qu.edu.sa

© 2014 Global Journals Inc. (US)

investors, policy makers, and all financial stakeholders concerning the determinants of audit reports in Saudi Arabia. The reminder of this paper is organized in four sections: a literature review and hypothesis development, data and methodology, analysis and results, and the conclusion.

II. Literature Review

The International Standards of Auditing (ISA) clarify how audit reports should communicate the auditor's work to the users of financial statements by providing a broad explanation of each kind of audit report and the reasons for auditors to issue a specific kind of report. ISA 700 describes the sequence for an unqualified audit report, starting with an introductory paragraph that determines both the auditor's and management's responsibilities, followed by the scope, setting out the nature of the audit procedures and how the auditors performed their work, and finally closing with a paragraph that provides the auditor's opinion and conclusion concerning the financial statement. Other ISAs set out the modifications that auditors should make to audit reports to communicate other issues regarding the financial statement. This detailed structure for the audit report informs the users of financial statements that an unqualified audit report communicates no additional information other than the creditability of the financial statement, whereas a modified audit report (an audit report that is not unqualified) sends direct signals to users of the financial statement concerning additional information, meaning that modified audit reports are taken as signaling bad news for all investors (Zureigat, 2010).

In their paper, Geiger and Rama (2006) contend that audit reports provide valuable information about the future of the financial situation for audited companies, although this information is subject to reporting quality. In measuring the accuracy of audit reports and the extent to which they send accurate signals concerning the future, they found that the Big Four audit firms provide better quality reports than on-Big Four audit firms, as the former have the lowest rate of inaccurate audit reports. This would seem to indicate that audit reports do not provide an accurate reading all the time due to the nature of the auditing process, which is based on sampling. This issue has led to greater concern on the part of auditors regarding their modified opinions and the risks associated with their audits, especially when considering the cost of modified audit reports. Chen et al. (2001) argue that companies receiving modified audit reports will be criticized by investors and regulators, and consequently face greater political and economic costs. Carey et al. (2008) assert that modified audit reports are costly both for the auditors is suing such reports as they could be replaced by another auditor having given modified opinions, and for the audited companies that receive a modified audit report due to the external influence of the negative information contained in the report. This complex environment presents huge challenges for both the audited companies and the auditors providing modified audit reports. Modified audit reports tend to be the final solution, issued after auditors have had discussions with their clients about the modifications that should be implemented in financial statements, resulting in a decrease in the number of modified audit reports. Chen et al. (2001), using data from 1995 to 1997, reported that only 10% of Chinese companies received modified reports.

Previous studies have investigated audit reports, their implications, and factors associated with those reports. A leading study conducted by Firth (1978) concluded that audit reports contain valuable information that affects investors' decisions, and many researchers have since corroborated this (Chen et al., 2000; Fields &Wilkins, 1991; Keller & Davidson, 1983; Martinez et al., 2004; O'Reilly, 2009). Such studies have provided the motivation to investigate the factors and circumstances that are associated with different audit reports. Dopuch et al.'s (1987) study was one of the first papers in this area to investigate how financial and market variables could affect auditors' decisions to issue qualified audit reports. They present a model to determine the variables that have the power to predict auditors 'modifications to opinions. The results show that current year loss, industry return, and changes in leverage (the ratio of total liabilities to total assets) are the most powerful variables in predicting auditor's qualifications. Keasey et al. (1988) studied 540 financial reports for small firms in the U.K. using 20 financial and non-financial variables to explain auditors' qualifications. They found that audit qualifications in small companies are more likely to take place when companies are audited by one of the Big Four audit firms, have received an auditor's qualification in the previous year, and have large audit lags. Koh and Killough (1990) followed the same approach to assess the effect of financial ratios on predicting going concern audit opinions. Their results indicate that financial ratios can predict more than 80% of auditors' going concern reports, which provides strong evidence concerning the message contained in going concern audit reports and the effectiveness of auditing.

Laitinen and Laitinen (1998) aimed to identify the reasons for auditors' qualifications in Finland by developing a model using financial statement information. The results indicate that audit report qualifications are associated with low profitability and low growth. Also, a qualified audit report is negatively associated with the share of equity in the balance sheet and the number of employees. Chen et al. (2001) investigated Chinese companies and how audit reports

© 2014 Global Journals Inc. (US)

were affected by different variables related to earnings management; they found that companies with more years listed on the stock exchange and highly leveraged companies are more likely to receive qualified audit reports, whereas large size companies are less likely to receive such reports. Spa this (2003) investigated if financial and non-financial information can be used to distinguish between the auditor's choice of qualified and unqualified audit reports in Greece. The results revealed that an auditor's qualifications are associated with financial information such as distress and non-financial information such as firm litigation. Ireland (2003) investigated variables that determine audit report qualifications (going concern and non-going concern qualifications) in the U.K., finding that large companies, companies that are highly geared, and companies that have received audit qualifications previously are more likely to receive qualified audit reports.

Caraman is and Spa this (2006) aimed to test whether financial and non-financial information variables can be used to predict qualified and unqualified audit reports in the Athens stock market; they also used audit firm-related variables in their tests to investigate their association with qualified audit reports. The results revealed that neither audit fees nor auditor size (Big Four and non-Big Four auditors) affect audit reports, whereas financial variables such as operating margin to total assets and current ratio are significantly associated with auditors' qualifications. Masyitoh et al. (2010) explored factors that enhance the issuance of going concern audit reports in Indonesia. Their results reveal that audit committee, profitability, cash flow, and liquidity do not significantly affect the issuance of audit reports, but that there is a significant effect from auditor size and solvability. In a recent study, Habib (2013) provided an analysis of auditor-related factors and firm-specific factors that affect an auditor's decision to issue a modified audit report. The results indicate that audit firm size and audit report lag are positively associated with the issuance of modified audit reports, where as audit fees are negatively associated. Also, he found that company size and profitability yare negatively associated with modified audit reports, and at the same time leverage and company losses are positively associated with these reports.

The previous literature clearly indicates the importance of both auditor-related factors and company-specific characteristics in an auditor's decision to issue a modified audit report, and there is evidence for both developed countries and emerging markets. This study aims to investigate factors that affect audit reports in Saudi Arabia as an emerging and growing market that needs such studies to clarify the nature of auditing in greater depth, especially bearing in mind that there is no prior research in this area in Saudi Arabia. Based on this discussion, the first hypothesis of this study is:

H1: Auditor-related factors and firm-specific factors affect audit reports in Saudi Arabia.

Auditor-related factors

Auditor-related factors can be considered a proxy for audit quality, especially when considering audit firm size, e.g., Big Four or non-Big Four. In her leading research, DeAngleo (1981) linked audit firm size to performance, finding that large firms follow more restrictive rules and procedures in per forming the audit process, which leads to higher quality audits. Many researchers have followed this line of argument and provided evidence for the auditor's size as a proxy for audit quality (Francis & Yu, 2009; Krishnan, 2003; Zureigat, 2011). Also, the literature provides insights in to the effect of auditor's size on audit reporting (Caraman is & Spathis, 2006; Habib, 2013; Keasey et al., 1988; Masyitoh et al., 2010). This study considers only auditor size as an auditor-related factor as no information is available on audit fees or auditors' specialization in Saudi Arabia. The second hypothesis thus aims to investigate the effect of Saudi auditors' size on audit reports:

H2: Auditors' size significantly affects audit reports in Saudi Arabia.

Firm-specific factors

Firm-specific factors have been researched widely in developed economies to assess whether or not financial and non-financial variables affect audit reports; however, these factors have not been investigated at the same level in emerging markets (Chen et al., 2001; Habib, 2013). Firm-specific factors are important in this area due to their importance to auditors, who assess their clients' risks through any auditing process. Gissel et al. (2010) argues that if companies that receive modified audit reports show similar characteristics, identifying these would be very helpful for auditors and stakeholders in forecasting. Firm size is one of the most important factors that have been investigated in the literature, based on the argument that large firms are less likely to receive modified audit reports (Chen et al., 2001; Habib, 2013; Ireland, 2003). Hence, the third hypothesis in this study investigates firm size and its effect on audit reports:

H3: Firm size significantly affects audit reports in Saudi Arabia.

In the same vein, company age is related to company size, especially when considering the length of time a specific company has been listed on the stock market. Both Dopuch (1984) and Habib (2013) show that the length of time a company has been listed is negatively related to modified audit reports, so the fourth hypothesis in the study is as follows:

H4: The length of time for which audited firms have been listed significantly affects audit reports in Saudi Arabia.

© 2014 Global Journals Inc. (US)

Other firm-specific factors related to financial variables have also been investigated due to their impact on a firm's risk. Researchers have shown that a company's profit ability negatively affects modified audit reports (Habib, 2013; Laitinen & Laitinen, 1998; Masyitoh et al., 2010). Thus, the fifth hypothesis is:

H5: Profitability significantly affects audit reports in Saudi Arabia.

Leverage is also a factor that appears to affect audit reports due to its important role in assessing a firm's risk, which affects auditors' judgments regarding financial statements. Research has indicated that leverage is positively associated with modified audit reports (Chen et al., 2001; Dopuch et al., 1987; Habib, 2013). In this study, the sixth hypothesis is:

H6: Leverage significantly affects audit reports in Saudi Arabia.

III. Data and Methodology

In Saudi Arabia, all listed firms are to disclose their information through the Saudi Stock Exchange (TADAWUL), which publishes all the financial reports and financial statements for listed companies. For this study, all financial reports for Saudi listed companies that disclosed financial statements as at the end of 2013 were analyzed based on information submitted to TADAWUL. Data were collected for 168 listed firms in total. Of these, 15 companies had incomplete information and were therefore excluded from the analysis, resulting in a final sample of 153 companies.

A regression model was developed to investigate the relation between audit reports and other variables and determine the effect of those independent variables on auditors' reports as follows:

$$AR = \alpha + \beta 1AS + \beta 2LnFS + \beta 3TL + \beta 4P + \beta 5L$$

where:

AR de notes audit reports, which were classified based on ISA into five categories: unqualified audit report (1), explanatory note (2), qualified report (3), adverse report (4), and disclaimer of opinion (5).

AS represents auditor size, classified as Big Four (taking the value 1) or non-Big Four (taking the value 0).

L n FS is firm size, measured using the natural logarithm of total assets as an index for firm size.

TL is time l is ted, indicating the number of years each company has been listed on the Saudi Stock Exchange.

P represents profitability, measured using net profit after tax.

L denotes leverage, measured by dividing total liabilities by total assets.

IV. Analysis and Results

Here the results are presented for 153 Saudi listed companies which had complied with all disclosure requirements and submitted full financial information in their financial reports to the Saudi stock market (TADAWUL) as at the end of 2013. Table 1 shows that more than 80% of these companies received unqualified audit reports, whereas less than 20% received modified audit reports. Of these, 13.7% of the listed companies received unqualified reports with explanatory notes, 3.3% received qualified audit reports, and 2.6% received a disclaimer of opinion, and none received an adverse opinion.

Table 1 : Frequencies for audit reports and audit firm size (Saudi listed companies as at the end of 2013)

Audit Report	Frequency	Percent	Cumulative Percent
Unqualified	123	80.4	80.4
Explanatory note	21	13.7	94.1
Qualified	5	3.3	97.4
Disclaimer	4	2.6	100
Total	153	100	
Audit Firm Size	**Frequency**	**Percent**	**Cumulative Percent**
Non-Big Four	33	21.6	21.6
Big Four	120	78.4	100
Total	153	100	

Source: Own elaboration based on data from TADAWUL

The table also shows the descriptive statistics for auditor size, i.e., whether or not the audit firms performing audits for Saudi listed companies for the financial year 2013 were members of the Big Four group of audit firms. The results clearly indicate that the Big Four audit firms hold the majority of the audit market in

© 2014 Global Journals Inc. (US)

Saudi Arabia, auditing 78.4% of the Saudi listed companies. This suggests that Saudi companies are willing to hire large international audit firms rather than local or smaller audit firms, which could be an indicator that they perceive audits by large firms as being of higher quality.

The numbers of years for which the 153 firms in the sample have been listed on the Saudi stock exchange are shown as frequencies in Table 2.As can be seen, most Saudi listed companies have been listed and trading in TADAWUL for less than 10 years. Only 6% of Saudi listed companies have more than 30 years of experience as listed companies. These results indicate that Saudi listed companies are not yet mature and the Saudi stock market is still considered an emerging market, especially considering that in 1975 there were only 14 public companies in Saudi Arabia, the Saudi market remained informal until the early 1980s, and the Saudi stock market was only formally established and named TADAWUL under capital market authority in 2003 (TADAWUL, 2014).

Table 2 : Frequencies of number of years firms have been listed on the Saudi stock exchange (as at the end of 2013)

Time Listed (years)	Frequency	Percent	Cumulative Percent
10 and Less	77	50.3	50.3
More than 10 to 20	25	16.4	66.7
More than 20 to 30	42	27.4	94.1
More than 30	9	5.9	100.0
Total	153	100.0	

Source: Own elaboration based on data from TADAWUL

Table 3 presents the Pearson's correlation statistics showing the relationship between the audit reports and the study variables. The results show that audit reports are significantly correlated with firm size, profit, and leverage, but they are not correlated to auditor size or years listed on the stock exchange. The negative relation between audit reports and both firm size and profit indicates that unqualified audit reports are more likely to be issued for those companies that are larger and have higher profits, while the positive correlation between audit reports and leverage indicates that highly leveraged companies are more likely to receive modified (not unqualified) audit reports.

Table 3 : Correlation between audit reports and study variables

		Audit Report	Auditor Size	Ln Firm Size	Time Listed	Profit	Leverage
Audit Report	Pearson Correlation	1	-0.08	-0.227***	-0.046	-0.204**	0.257***
Auditor Size	Pearson Correlation	-0.08	1	0.149*	-0.158*	-0.001	0.261***
Ln Firm Size	Pearson Correlation	-0.227***	0.149*	1	0.003	0.350***	0.135*
Time Listed	Pearson Correlation	-0.046	-0.158*	0.003	1	0.045	-0.007
Profit	Pearson Correlation	-0.204**	-0.001	0.350***	0.045	1	-0.187**
Leverage	Pearson Correlation	0.257***	0.261***	0.135*	-0.007	-0.187**	1

*Note: ***, ** and * indicate significance at the 1%, 5% and 10% levels, respectively*

The model summary statistics are presented in Table 4, which shows anR2 value of17.6% and adjusted R2of14.7%.Thus, the independent variables explain around 15% of the changes in the dependent variable (audit reports). Table 4 also presents ANOVA statistics that clearly show the relevance of the model (F=6.078, p=0.01). This result provides support for H1, indicating that auditor-related factors and firm-specific factors do indeed affect audit reports in Saudi Arabia.

© 2014 Global Journals Inc. (US)

Table 4 : Model summary statistics and ANOVA

R^2	Adjusted R^2	Mean Square	F	Sig.
0.176	0.147	3.176	6.078***	0.000

*Note: *** indicates significance at the 1% level*

Table 5 presents the results of the multiple regression model examining the relations between variables. A test for multi-collinearity was also performed to investigate the internal correlation between independent variables: no Collinearity problem exists as all VIF values are less than 10.

Table 5 : Multiple regression statistics and VIF values

	Beta	T	Sig.	VIF
(Constant)		6.211***	0.000	
Auditor Size	-0.161	-1.983**	0.049	1.142
Ln Firm Size	-0.233	-2.769***	0.006	1.216
Time Listed	-0.068	-0.883	0.379	1.029
Profit	-0.055	-0.654	0.514	1.222
Leverage	0.343	4.148***	0.000	1.179

*Note: ***, ** and * indicate significance at the 1%, 5% and 10% levels, respectively*

The regression results show significant relations between audit reports as the dependent variable and auditor size, firm size and leverage as independent variables. There is a significant negative effect for auditor size (T=-1.983, p=0.05), indicating that Big Four auditors tend to be more flexible in issuing modified audit reports than non-Big Four auditors. This result provides support for H2, namely that auditor size significantly affects audit reports in Saudi Arabia. This result is in line with previous literature (Habib, 2013; Keasey et al., 1988; Masyitoh et al., 2010). A significant negative relation is also found for firm size (T=-2.769, p=0.01), which supports H3 and indicates that auditors in the Saudi context tend to issue modified audit reports for small companies rather than large companies. This result is consistent with the findings of Chen et al. (2001), Ireland (2003), and Habib (2013).

H4 and H5 concerned the effect of years as a listed company and profit on audit reports. The results of the regression model show that neither of these firm-related factors affects auditors' reports in the Saudi context (time listed, T=-0.883, ns; profit, T=-0.654, ns). Thus, H4 and H5 are not supported. The result for the years a company has been listed can be explained by the fact that the Saudi stock market is an emerging market that was regulated only 11 years ago (in 2003), and also that most of the companies have been listed for less than 10 years (Table 2). They oung age of the Saudi stock market could be the reason why this study has not capture dan effect of time as a listed company. Furthermore, the result for the relation of profit and audit reports is not entirely surprising as prior studies have found the same result (Masyitoh et al., 2010), and this could also be explained by the fact that most Saudi listed companies are audited by Big Four audit firms, which tend not to be driven by firm-related factors.

For H6 on the other hand, concerning the effect of leverage on audit reports, there is support. The results of the multiple regression analysis show that leverage significantly affects the audit reports (T=4.148, p=0.01). This result indicates that companies with high leverage are more likely to receive modified audit reports than those with less leverage, and is in line with prior literature that has provided evidence of auditors' concerns regarding firm risk that can be measured by leverage (Chen et al., 2001; Dopuch et al., 1987; Habib, 2013).

V. Conclusion

Audit reports are considered the final product of any auditing task in which auditors express the results of their work on financial statements to enhance the credibility of financial reports. Auditors are required to form their reports in line with the auditing standards adopted. These reports are important for auditors as their final product, for the companies audited as the reports can be used as an indicator of their integrity, and for the users of financial statement who rely on there ports to identify the level of credibility of the financial statements. In Saudi Arabia, audit reports are classified into five categories. Previous research has argued that audit reports are a function of many firm-related factors or auditor-related factors (Habib, 2013), which provides an incentive to investigate such arguments. The Saudi market is considered one of the largest in the MENA region, and is regulated by two systems: international accounting and auditing standards in the case of financial companies, and national accounting and

© 2014 Global Journals Inc. (US)

auditing standards in the case of other companies. This has led to criticism of auditing practice in Saudi Arabia, especially since the recent scandal in 2014 regarding the fraudulent financial statement of one of the largest telecommunications companies, which received an unqualified audit report issued by one of the Big Four auditors.

This study has investigated whether firm-related factors and auditor-related factors affect auditor reports in the Saudi context. A regression model has been developed to explore whether auditor size, firm size, years as a listed company (time listed), profitability, and leverage affect the audit reports. Data were collected as at the end of 2013 for 153 Saudi listed companies. The results of the multiple regression show that auditor size, firm size, and leverage significantly affect audit reports: large auditors (Big Four) tend to issue modified audit reports to a greater extent than smaller auditors (non-Big Four); small companies are more likely to receive modified audit reports; highly leveraged companies are more likely to receive modified audit reports than those with lower leverage. However, the results show that neither time listed nor profitability affect audit reports in the Saudi context. These results are of considerable importance for the users of financial statements, auditors, and regulators, as they provide an insight in to the factors that are associated with audit reports. Future research can focus on other factors, taking long time series into account, with segregation between companies that comply with national and international accounting standards.

Reference Références Referencias

1. Caraman is, C., & Spa this, C. (2006). Audi tee and audit firm characteristics as determinants of audit qualifications: Evidence from the Athens Stock Exchange. Managerial Auditing Journal, 21(9), 905-920.
2. Carey, P. J., Geiger, M. A., & O'CONNELL, B. T. (2008). Costs Associated With Going-Concern-Modified Audit Opinions: An Analysis of the Australian Audit Market. Abacus, 44(1), 61-81.
3. Chen, C. J., Chen, S., & Su, X. (2001). Profitability regulation, earnings management, and modified audit opinions: Evidence from China. Auditing: A Journal of Practice & Theory, 20(2), 9-30.
4. Chen, C. J., Su, X., & Zhao, R. (2000). An Emerging Market's Reaction to Initial Modified Audit Opinions: Evidence from the Shanghai Stock Exchange*. Contemporary Accounting Research, 17(3), 429-455.
5. DeAngelo, L. E. (1981). Auditor size and audit quality. Journal of accounting and economics, 3(3), 183-199.
6. Dopuch N., Holthausen, R. W., & Left wich, R. W. (1987). Predicting audit qualifications with financial and market variables. Accounting Review, 431-454.
7. Fields, L. P., & Wilkins, M. S. (1991). The information content of withdrawn audit qualifications: New evidence on the value of "subject to" opinions. Auditing: A Journal of practice and Theory, 10(2), 62-69.
8. Firth, M.(1978). Qualified audit reports: their impact on investment decisions. Accounting Review, 642-650.
9. Francis, J. R., & Yu, M. D. (2009).Big 4 office size and audit quality. The Accounting Review, 84(5), 1521-1552.
10. Geiger, M. A., & Rama, D. V. (2006). Audit firm size and going-concern reporting accuracy. Accounting Horizons, 20(1), 1-17.
11. Gissel, J., Robertson, J. and Stefaniak, C.M. (2010). Formation and consequences of going concern opinions: a review of the literature. Journal of Accounting Literature. 29, 59-141.
12. Habib, A. (2013). A meta-analysis of the determinants of modified audit opinion decisions. Managerial Auditing Journal, 28(3), 184-216.
13. Ireland, J. C. (2003). An empirical investigation of determinants of audit reports in the UK. Journal of Business Finance & Accounting, 30(7-8), 975-1016.
14. Keasey, K., Watson, R., & Wynarczy k, P. (1988). The small company audit qualification: a preliminary investigation. Accounting and Business Research, 18 (72), 323-334.
15. Keller, S. B., & Davidson, L. F. (1983).An assessment of individual investor reaction to certain qualified audit opinions. Auditing: A Journal of Practice & Theory, 3(1), 1-22.
16. Koh, H. C., & Killough, L. N. (1990).The USE OF MULTIPLE DISCRIMINANT ANALYSIS IN THE ASSESSMENT OF THE GOING-CONCERN STATUS OF AN AUDIT CLIENT. Journal of Business Finance & Accounting, 17(2), 179-192.
17. Krishnan, G. V. (2003). Does Big 6 auditor industry expertise constrain earnings management?. Accounting horizons, 17, 1-16.
18. Laitinen, E. K., & Laitinen, T. (1998). Qualified audit reports in Finland: evidence from large companies. European Accounting Review, 7(4), 639-653.
19. Maggina, A., & Tsaklanganos, A. A. (2011). Predicting Audit Opinions Evidence From The Athens Stock Exchange. Journal of Applied Business Research (JABR), 27(4), 53-68.
20. Martens, D., Bruynseels, L., Baesens, B., Will ekens, M., & Vanthienen, J. (2008).Predicting going concern opinion with data mining. Decision Support Systems, 45(4), 765-777.
21. Martínez†, M. C. P., Martínez, A. V., & Benau, M. A. G. (2004). Reactions of the Spanish capital market to qualified audit reports. European Accounting Review, 13(4), 689-711.
22. Masyitoh, O. C., & AK, D. A. S. (2010).The analysis of determinants of going concern audit report.

© 2014 Global Journals Inc. (US)

Journal of Modern Accounting and Auditing, 6(4), 26-37.

23. O'Reilly, D. M. (2009). Do investors perceive the going-concern opinion as useful for pricing stocks?. Managerial Auditing Journal, 25(1), 4-16.
24. Spathis, C. T. (2003). Audit qualification, firm litigation, and financial information: an empirical analysis in Greece. International Journal of Auditing, 7(1), 71-85.
25. TADAWUL. (2014). TADAWUL reports. Accessed on lineSeptember2014at:http://www.tadawul.com.sa/wps/portal/!ut/p/c1/04_SB8K8xLLM9MSSzPy8xBz9CP0os3g_A-ewlE8TlwODYFMDA08Tn7AQZx93Y wN3I_3g1Dz9gmxHRQB7GACB/
26. Tina V. & Nikola B. (2012).Analysis of Auditors' Going Concern Judgment. The Business Review, Cambridge, 19 (2), 115-120.
27. Zureigat, Q. M. (2011). The effect of ownership structure on audit quality: Evidence from Jordan. International Journal of Business and Social Science, 2 (10), 38-46.
28. Zureigat, Q. (2010). The Effect of Modified Auditors Opinions on Shares Prices: Evidence from Amman .Stock Exchange. Jordan Journal of Business Administration, 6(2), 210-224.

© 2014 Global Journals Inc. (US)

Global Journals Inc. (US) Guidelines Handbook 2014

www.GlobalJournals.org

FELLOW OF ASSOCIATION OF RESEARCH SOCIETY IN BUSINESS (FARSB)

Global Journals Incorporate (USA) is accredited by Open Association of Research Society (OARS), U.S.A and in turn, awards "FARSB" title to individuals. The 'FARSB' title is accorded to a selected professional after the approval of the Editor-in-Chief/Editorial Board Members/Dean.

- The "FARSB" is a dignified title which is accorded to a person's name viz. Dr. John E. Hall, Ph.D., FARSB or William Walldroff, M.S., FARSB.

FARSB accrediting is an honor. It authenticates your research activities. After recognition as FARSB, you can add 'FARSB' title with your name as you use this recognition as additional suffix to your status. This will definitely enhance and add more value and repute to your name. You may use it on your professional Counseling Materials such as CV, Resume, and Visiting Card etc.

The following benefits can be availed by you only for next three years from the date of certification:

FARSB designated members are entitled to avail a 40% discount while publishing their research papers (of a single author) with Global Journals Incorporation (USA), if the same is accepted by Editorial Board/Peer Reviewers. If you are a main author or co-author in case of multiple authors, you will be entitled to avail discount of 10%.

Once FARSB title is accorded, the Fellow is authorized to organize a symposium/seminar/conference on behalf of Global Journal Incorporation (USA).The Fellow can also participate in conference/seminar/symposium organized by another institution as representative of Global Journal. In both the cases, it is mandatory for him to discuss with us and obtain our consent.

You may join as member of the Editorial Board of Global Journals Incorporation (USA) after successful completion of three years as Fellow and as Peer Reviewer. In addition, it is also desirable that you should organize seminar/symposium/conference at least once.

We shall provide you intimation regarding launching of e-version of journal of your stream time to time.This may be utilized in your library for the enrichment of knowledge of your students as well as it can also be helpful for the concerned faculty members.

The FARSB can go through standards of OARS. You can also play vital role if you have any suggestions so that proper amendment can take place to improve the same for the benefit of entire research community.

As FARSB, you will be given a renowned, secure and free professional email address with 100 GB of space e.g. johnhall@globaljournals.org. This will include Webmail, Spam Assassin, Email Forwarders,Auto-Responders, Email Delivery Route tracing, etc.

The FARSB will be eligible for a free application of standardization of their researches. Standardization of research will be subject to acceptability within stipulated norms as the next step after publishing in a journal. We shall depute a team of specialized research professionals who will render their services for elevating your researches to next higher level, which is worldwide open standardization.

The FARSB member can apply for grading and certification of standards of their educational and Institutional Degrees to Open Association of Research, Society U.S.A. Once you are designated as FARSB, you may send us a scanned copy of all of your credentials. OARS will verify, grade and certify them. This will be based on your academic records, quality of research papers published by you, and some more criteria. After certification of all your credentials by OARS, they will be published on your Fellow Profile link on website https://associationofresearch.org which will be helpful to upgrade the dignity.

The FARSB members can avail the benefits of free research podcasting in Global Research Radio with their research documents. After publishing the work, (including published elsewhere worldwide with proper authorization) you can upload your research paper with your recorded voice or you can utilize chargeable services of our professional RJs to record your paper in their voice on request.

The FARSB member also entitled to get the benefits of free research podcasting of their research documents through video clips. We can also streamline your conference videos and display your slides/ online slides and online research video clips at reasonable charges, on request.

© Copyright by Global Journals Inc.(US)| Guidelines Handbook

The FARSB is eligible to earn from sales proceeds of his/her researches/reference/review Books or literature, while publishing with Global Journals. The FARSB can decide whether he/she would like to publish his/her research in a closed manner. In this case, whenever readers purchase that individual research paper for reading, maximum 60% of its profit earned as royalty by Global Journals, will be credited to his/her bank account. The entire entitled amount will be credited to his/her bank account exceeding limit of minimum fixed balance. There is no minimum time limit for collection. The FARSC member can decide its price and we can help in making the right decision.

The FARSB member is eligible to join as a paid peer reviewer at Global Journals Incorporation (USA) and can get remuneration of 15% of author fees, taken from the author of a respective paper. After reviewing 5 or more papers you can request to transfer the amount to your bank account.

MEMBER OF ASSOCIATION OF RESEARCH SOCIETY IN BUSINESS (MARSB)

The ' MARSB ' title is accorded to a selected professional after the approval of the Editor-in-Chief / Editorial Board Members/Dean.

The “MARSB” is a dignified ornament which is accorded to a person’s name viz. Dr. John E. Hall, Ph.D., MARSB or William Walldroff, M.S., MARSB.

MARSB accrediting is an honor. It authenticates your research activities. After becoming MARSB, you can add 'MARSB' title with your name as you use this recognition as additional suffix to your status. This will definitely enhance and add more value and repute to your name. You may use it on your professional Counseling Materials such as CV, Resume, Visiting Card and Name Plate etc.

The following benefitscan be availed by you only for next three years from the date of certification.

MARSB designated members are entitled to avail a 25% discount while publishing their research papers (of a single author) in Global Journals Inc., if the same is accepted by our Editorial Board and Peer Reviewers. If you are a main author or co-author of a group of authors, you will get discount of 10%.

As MARSB, you will be given a renowned, secure and free professional email address with 30 GB of space e.g. johnhall@globaljournals.org. This will include Webmail, Spam Assassin, Email Forwarders,Auto-Responders, Email Delivery Route tracing, etc.

© Copyright by Global Journals Inc.(US) | Guidelines Handbook

We shall provide you intimation regarding launching of e-version of journal of your stream time to time.This may be utilized in your library for the enrichment of knowledge of your students as well as it can also be helpful for the concerned faculty members.

The MARSB member can apply for approval, grading and certification of standards of their educational and Institutional Degrees to Open Association of Research, Society U.S.A.

Once you are designated as MARSB, you may send us a scanned copy of all of your credentials. OARS will verify, grade and certify them. This will be based on your academic records, quality of research papers published by you, and some more criteria.

It is mandatory to read all terms and conditions carefully.

Auxiliary Memberships

Institutional Fellow of Open Association of Research Society (USA)-OARS (USA)

Global Journals Incorporation (USA) is accredited by Open Association of Research Society, U.S.A (OARS) and in turn, affiliates research institutions as "Institutional Fellow of Open Association of Research Society" (IFOARS).

The "FARSC" is a dignified title which is accorded to a person's name viz. Dr. John E. Hall, Ph.D., FARSC or William Walldroff, M.S., FARSC.

The IFOARS institution is entitled to form a Board comprised of one Chairperson and three to five board members preferably from different streams. The Board will be recognized as "Institutional Board of Open Association of Research Society"-(IBOARS).

The Institute will be entitled to following benefits:

The IBOARS can initially review research papers of their institute and recommend them to publish with respective journal of Global Journals. It can also review the papers of other institutions after obtaining our consent. The second review will be done by peer reviewer of Global Journals Incorporation (USA) The Board is at liberty to appoint a peer reviewer with the approval of chairperson after consulting us.

The author fees of such paper may be waived off up to 40%.

The Global Journals Incorporation (USA) at its discretion can also refer double blind peer reviewed paper at their end to the board for the verification and to get recommendation for final stage of acceptance of publication.

The IBOARS can organize symposium/seminar/conference in their country on behalf of Global Journals Incorporation (USA)-OARS (USA). The terms and conditions can be discussed separately.

The Board can also play vital role by exploring and giving valuable suggestions regarding the Standards of "Open Association of Research Society, U.S.A (OARS)" so that proper amendment can take place for the benefit of entire research community. We shall provide details of particular standard only on receipt of request from the Board.

The board members can also join us as Individual Fellow with 40% discount on total fees applicable to Individual Fellow. They will be entitled to avail all the benefits as declared. Please visit Individual Fellow-sub menu of GlobalJournals.org to have more relevant details.

We shall provide you intimation regarding launching of e-version of journal of your stream time to time. This may be utilized in your library for the enrichment of knowledge of your students as well as it can also be helpful for the concerned faculty members.

After nomination of your institution as "Institutional Fellow" and constantly functioning successfully for one year, we can consider giving recognition to your institute to function as Regional/Zonal office on our behalf.
The board can also take up the additional allied activities for betterment after our consultation.

The following entitlements are applicable to individual Fellows:

Open Association of Research Society, U.S.A (OARS) By-laws states that an individual Fellow may use the designations as applicable, or the corresponding initials. The Credentials of individual Fellow and Associate designations signify that the individual has gained knowledge of the fundamental concepts. One is magnanimous and proficient in an expertise course covering the professional code of conduct, and follows recognized standards of practice.

Open Association of Research Society (US)/ Global Journals Incorporation (USA), as described in Corporate Statements, are educational, research publishing and professional membership organizations. Achieving our individual Fellow or Associate status is based mainly on meeting stated educational research requirements.

Disbursement of 40% Royalty earned through Global Journals : Researcher = 50%, Peer Reviewer = 37.50%, Institution = 12.50% E.g. Out of 40%, the 20% benefit should be passed on to researcher, 15 % benefit towards remuneration should be given to a reviewer and remaining 5% is to be retained by the institution.

We shall provide print version of 12 issues of any three journals [as per your requirement] out of our 38 journals worth $ 2376 USD.

Other:

The individual Fellow and Associate designations accredited by Open Association of Research Society (US) credentials signify guarantees following achievements:

- The professional accredited with Fellow honor, is entitled to various benefits viz. name, fame, honor, regular flow of income, secured bright future, social status etc.

- In addition to above, if one is single author, then entitled to 40% discount on publishing research paper and can get 10%discount if one is co-author or main author among group of authors.
- The Fellow can organize symposium/seminar/conference on behalf of Global Journals Incorporation (USA) and he/she can also attend the same organized by other institutes on behalf of Global Journals.
- The Fellow can become member of Editorial Board Member after completing 3yrs.
- The Fellow can earn 60% of sales proceeds from the sale of reference/review books/literature/publishing of research paper.
- Fellow can also join as paid peer reviewer and earn 15% remuneration of author charges and can also get an opportunity to join as member of the Editorial Board of Global Journals Incorporation (USA)
- • This individual has learned the basic methods of applying those concepts and techniques to common challenging situations. This individual has further demonstrated an in–depth understanding of the application of suitable techniques to a particular area of research practice.

Note :

"

- In future, if the board feels the necessity to change any board member, the same can be done with the consent of the chairperson along with anyone board member without our approval.
- In case, the chairperson needs to be replaced then consent of 2/3rd board members are required and they are also required to jointly pass the resolution copy of which should be sent to us. In such case, it will be compulsory to obtain our approval before replacement.
- In case of "Difference of Opinion [if any]" among the Board members, our decision will be final and binding to everyone. "

Process of submission of Research Paper

The Area or field of specialization may or may not be of any category as mentioned in 'Scope of Journal' menu of the GlobalJournals.org website. There are 37 Research Journal categorized with Six parental Journals GJCST, GJMR, GJRE, GJMBR, GJSFR, GJHSS. For Authors should prefer the mentioned categories. There are three widely used systems UDC, DDC and LCC. The details are available as 'Knowledge Abstract' at Home page. The major advantage of this coding is that, the research work will be exposed to and shared with all over the world as we are being abstracted and indexed worldwide.

The paper should be in proper format. The format can be downloaded from first page of 'Author Guideline' Menu. The Author is expected to follow the general rules as mentioned in this menu. The paper should be written in MS-Word Format (*.DOC,*.DOCX).

The Author can submit the paper either online or offline. The authors should prefer online submission.Online Submission: There are three ways to submit your paper:

(A) (I) First, register yourself using top right corner of Home page then Login. If you are already registered, then login using your username and password.

(II) Choose corresponding Journal.

(III) Click 'Submit Manuscript'. Fill required information and Upload the paper.

(B) If you are using Internet Explorer, then Direct Submission through Homepage is also available.

(C) If these two are not convenient, and then email the paper directly to dean@globaljournals.org.

Offline Submission: Author can send the typed form of paper by Post. However, online submission should be preferred.

Preferred Author Guidelines

MANUSCRIPT STYLE INSTRUCTION (Must be strictly followed)

Page Size: 8.27" X 11'"

- Left Margin: 0.65
- Right Margin: 0.65
- Top Margin: 0.75
- Bottom Margin: 0.75
- Font type of all text should be Swis 721 Lt BT.
- Paper Title should be of Font Size 24 with one Column section.
- Author Name in Font Size of 11 with one column as of Title.
- Abstract Font size of 9 Bold, "Abstract" word in Italic Bold.
- Main Text: Font size 10 with justified two columns section
- Two Column with Equal Column with of 3.38 and Gaping of .2
- First Character must be three lines Drop capped.
- Paragraph before Spacing of 1 pt and After of 0 pt.
- Line Spacing of 1 pt
- Large Images must be in One Column
- Numbering of First Main Headings (Heading 1) must be in Roman Letters, Capital Letter, and Font Size of 10.
- Numbering of Second Main Headings (Heading 2) must be in Alphabets, Italic, and Font Size of 10.

You can use your own standard format also.
Author Guidelines:

1. General,

2. Ethical Guidelines,

3. Submission of Manuscripts,

4. Manuscript's Category,

5. Structure and Format of Manuscript,

6. After Acceptance.

1. GENERAL

Before submitting your research paper, one is advised to go through the details as mentioned in following heads. It will be beneficial, while peer reviewer justify your paper for publication.

Scope

The Global Journals Inc. (US) welcome the submission of original paper, review paper, survey article relevant to the all the streams of Philosophy and knowledge. The Global Journals Inc. (US) is parental platform for Global Journal of Computer Science and Technology, Researches in Engineering, Medical Research, Science Frontier Research, Human Social Science, Management, and Business organization. The choice of specific field can be done otherwise as following in Abstracting and Indexing Page on this Website. As the all Global

Journals Inc. (US) are being abstracted and indexed (in process) by most of the reputed organizations. Topics of only narrow interest will not be accepted unless they have wider potential or consequences.

2. ETHICAL GUIDELINES

Authors should follow the ethical guidelines as mentioned below for publication of research paper and research activities.

Papers are accepted on strict understanding that the material in whole or in part has not been, nor is being, considered for publication elsewhere. If the paper once accepted by Global Journals Inc. (US) and Editorial Board, will become the copyright of the Global Journals Inc. (US).

Authorship: The authors and coauthors should have active contribution to conception design, analysis and interpretation of findings. They should critically review the contents and drafting of the paper. All should approve the final version of the paper before submission

The Global Journals Inc. (US) follows the definition of authorship set up by the Global Academy of Research and Development. According to the Global Academy of R&D authorship, criteria must be based on:

1) Substantial contributions to conception and acquisition of data, analysis and interpretation of the findings.

2) Drafting the paper and revising it critically regarding important academic content.

3) Final approval of the version of the paper to be published.

All authors should have been credited according to their appropriate contribution in research activity and preparing paper. Contributors who do not match the criteria as authors may be mentioned under Acknowledgement.

Acknowledgements: Contributors to the research other than authors credited should be mentioned under acknowledgement. The specifications of the source of funding for the research if appropriate can be included. Suppliers of resources may be mentioned along with address.

Appeal of Decision: The Editorial Board's decision on publication of the paper is final and cannot be appealed elsewhere.

Permissions: It is the author's responsibility to have prior permission if all or parts of earlier published illustrations are used in this paper.

Please mention proper reference and appropriate acknowledgements wherever expected.

If all or parts of previously published illustrations are used, permission must be taken from the copyright holder concerned. It is the author's responsibility to take these in writing.

Approval for reproduction/modification of any information (including figures and tables) published elsewhere must be obtained by the authors/copyright holders before submission of the manuscript. Contributors (Authors) are responsible for any copyright fee involved.

3. SUBMISSION OF MANUSCRIPTS

Manuscripts should be uploaded via this online submission page. The online submission is most efficient method for submission of papers, as it enables rapid distribution of manuscripts and consequently speeds up the review procedure. It also enables authors to know the status of their own manuscripts by emailing us. Complete instructions for submitting a paper is available below.

Manuscript submission is a systematic procedure and little preparation is required beyond having all parts of your manuscript in a given format and a computer with an Internet connection and a Web browser. Full help and instructions are provided on-screen. As an author, you will be prompted for login and manuscript details as Field of Paper and then to upload your manuscript file(s) according to the instructions.

To avoid postal delays, all transaction is preferred by e-mail. A finished manuscript submission is confirmed by e-mail immediately and your paper enters the editorial process with no postal delays. When a conclusion is made about the publication of your paper by our Editorial Board, revisions can be submitted online with the same procedure, with an occasion to view and respond to all comments.

Complete support for both authors and co-author is provided.

4. MANUSCRIPT'S CATEGORY

Based on potential and nature, the manuscript can be categorized under the following heads:

Original research paper: Such papers are reports of high-level significant original research work.

Review papers: These are concise, significant but helpful and decisive topics for young researchers.

Research articles: These are handled with small investigation and applications

Research letters: The letters are small and concise comments on previously published matters.

5.STRUCTURE AND FORMAT OF MANUSCRIPT

The recommended size of original research paper is less than seven thousand words, review papers fewer than seven thousands words also.Preparation of research paper or how to write research paper, are major hurdle, while writing manuscript. The research articles and research letters should be fewer than three thousand words, the structure original research paper; sometime review paper should be as follows:

Papers: These are reports of significant research (typically less than 7000 words equivalent, including tables, figures, references), and comprise:

(a)Title should be relevant and commensurate with the theme of the paper.

(b) A brief Summary, "Abstract" (less than 150 words) containing the major results and conclusions.

(c) Up to ten keywords, that precisely identifies the paper's subject, purpose, and focus.

(d) An Introduction, giving necessary background excluding subheadings; objectives must be clearly declared.

(e) Resources and techniques with sufficient complete experimental details (wherever possible by reference) to permit repetition; sources of information must be given and numerical methods must be specified by reference, unless non-standard.

(f) Results should be presented concisely, by well-designed tables and/or figures; the same data may not be used in both; suitable statistical data should be given. All data must be obtained with attention to numerical detail in the planning stage. As reproduced design has been recognized to be important to experiments for a considerable time, the Editor has decided that any paper that appears not to have adequate numerical treatments of the data will be returned un-refereed;

(g) Discussion should cover the implications and consequences, not just recapitulating the results; conclusions should be summarizing.

(h) Brief Acknowledgements.

(i) References in the proper form.

Authors should very cautiously consider the preparation of papers to ensure that they communicate efficiently. Papers are much more likely to be accepted, if they are cautiously designed and laid out, contain few or no errors, are summarizing, and be conventional to the approach and instructions. They will in addition, be published with much less delays than those that require much technical and editorial correction.

The Editorial Board reserves the right to make literary corrections and to make suggestions to improve briefness.

It is vital, that authors take care in submitting a manuscript that is written in simple language and adheres to published guidelines.

Format

Language: The language of publication is UK English. Authors, for whom English is a second language, must have their manuscript efficiently edited by an English-speaking person before submission to make sure that, the English is of high excellence. It is preferable, that manuscripts should be professionally edited.

Standard Usage, Abbreviations, and Units: Spelling and hyphenation should be conventional to The Concise Oxford English Dictionary. Statistics and measurements should at all times be given in figures, e.g. 16 min, except for when the number begins a sentence. When the number does not refer to a unit of measurement it should be spelt in full unless, it is 160 or greater.

Abbreviations supposed to be used carefully. The abbreviated name or expression is supposed to be cited in full at first usage, followed by the conventional abbreviation in parentheses.

Metric SI units are supposed to generally be used excluding where they conflict with current practice or are confusing. For illustration, 1.4 l rather than 1.4 × 10-3 m3, or 4 mm somewhat than 4 × 10-3 m. Chemical formula and solutions must identify the form used, e.g. anhydrous or hydrated, and the concentration must be in clearly defined units. Common species names should be followed by underlines at the first mention. For following use the generic name should be constricted to a single letter, if it is clear.

Structure

All manuscripts submitted to Global Journals Inc. (US), ought to include:

Title: The title page must carry an instructive title that reflects the content, a running title (less than 45 characters together with spaces), names of the authors and co-authors, and the place(s) wherever the work was carried out. The full postal address in addition with the e-mail address of related author must be given. Up to eleven keywords or very brief phrases have to be given to help data retrieval, mining and indexing.

Abstract, used in Original Papers and Reviews:

Optimizing Abstract for Search Engines

Many researchers searching for information online will use search engines such as Google, Yahoo or similar. By optimizing your paper for search engines, you will amplify the chance of someone finding it. This in turn will make it more likely to be viewed and/or cited in a further work. Global Journals Inc. (US) have compiled these guidelines to facilitate you to maximize the web-friendliness of the most public part of your paper.

Key Words

A major linchpin in research work for the writing research paper is the keyword search, which one will employ to find both library and Internet resources.

One must be persistent and creative in using keywords. An effective keyword search requires a strategy and planning a list of possible keywords and phrases to try.

Search engines for most searches, use Boolean searching, which is somewhat different from Internet searches. The Boolean search uses "operators," words (and, or, not, and near) that enable you to expand or narrow your affords. Tips for research paper while preparing research paper are very helpful guideline of research paper.

Choice of key words is first tool of tips to write research paper. Research paper writing is an art.A few tips for deciding as strategically as possible about keyword search:

- One should start brainstorming lists of possible keywords before even begin searching. Think about the most important concepts related to research work. Ask, "What words would a source have to include to be truly valuable in research paper?" Then consider synonyms for the important words.
- It may take the discovery of only one relevant paper to let steer in the right keyword direction because in most databases, the keywords under which a research paper is abstracted are listed with the paper.
- One should avoid outdated words.

Keywords are the key that opens a door to research work sources. Keyword searching is an art in which researcher's skills are bound to improve with experience and time.

Numerical Methods: Numerical methods used should be clear and, where appropriate, supported by references.

Acknowledgements: Please make these as concise as possible.

References

References follow the Harvard scheme of referencing. References in the text should cite the authors' names followed by the time of their publication, unless there are three or more authors when simply the first author's name is quoted followed by et al. unpublished work has to only be cited where necessary, and only in the text. Copies of references in press in other journals have to be supplied with submitted typescripts. It is necessary that all citations and references be carefully checked before submission, as mistakes or omissions will cause delays.

References to information on the World Wide Web can be given, but only if the information is available without charge to readers on an official site. Wikipedia and Similar websites are not allowed where anyone can change the information. Authors will be asked to make available electronic copies of the cited information for inclusion on the Global Journals Inc. (US) homepage at the judgment of the Editorial Board.

The Editorial Board and Global Journals Inc. (US) recommend that, citation of online-published papers and other material should be done via a DOI (digital object identifier). If an author cites anything, which does not have a DOI, they run the risk of the cited material not being noticeable.

The Editorial Board and Global Journals Inc. (US) recommend the use of a tool such as Reference Manager for reference management and formatting.

Tables, Figures and Figure Legends

Tables: Tables should be few in number, cautiously designed, uncrowned, and include only essential data. Each must have an Arabic number, e.g. Table 4, a self-explanatory caption and be on a separate sheet. Vertical lines should not be used.

Figures: Figures are supposed to be submitted as separate files. Always take in a citation in the text for each figure using Arabic numbers, e.g. Fig. 4. Artwork must be submitted online in electronic form by e-mailing them.

Preparation of Electronic Figures for Publication

Even though low quality images are sufficient for review purposes, print publication requires high quality images to prevent the final product being blurred or fuzzy. Submit (or e-mail) EPS (line art) or TIFF (halftone/photographs) files only. MS PowerPoint and Word Graphics are unsuitable for printed pictures. Do not use pixel-oriented software. Scans (TIFF only) should have a resolution of at least 350 dpi (halftone) or 700 to 1100 dpi (line drawings) in relation to the imitation size. Please give the data for figures in black and white or submit a Color Work Agreement Form. EPS files must be saved with fonts embedded (and with a TIFF preview, if possible).

For scanned images, the scanning resolution (at final image size) ought to be as follows to ensure good reproduction: line art: >650 dpi; halftones (including gel photographs) : >350 dpi; figures containing both halftone and line images: >650 dpi.

Color Charges: It is the rule of the Global Journals Inc. (US) for authors to pay the full cost for the reproduction of their color artwork. Hence, please note that, if there is color artwork in your manuscript when it is accepted for publication, we would require you to complete and return a color work agreement form before your paper can be published.

Figure Legends: Self-explanatory legends of all figures should be incorporated separately under the heading 'Legends to Figures'. In the full-text online edition of the journal, figure legends may possibly be truncated in abbreviated links to the full screen version. Therefore, the first 100 characters of any legend should notify the reader, about the key aspects of the figure.

6. AFTER ACCEPTANCE

Upon approval of a paper for publication, the manuscript will be forwarded to the dean, who is responsible for the publication of the Global Journals Inc. (US).

6.1 Proof Corrections

The corresponding author will receive an e-mail alert containing a link to a website or will be attached. A working e-mail address must therefore be provided for the related author.

Acrobat Reader will be required in order to read this file. This software can be downloaded

(Free of charge) from the following website:

www.adobe.com/products/acrobat/readstep2.html. This will facilitate the file to be opened, read on screen, and printed out in order for any corrections to be added. Further instructions will be sent with the proof.

Proofs must be returned to the dean at dean@globaljournals.org within three days of receipt.

As changes to proofs are costly, we inquire that you only correct typesetting errors. All illustrations are retained by the publisher. Please note that the authors are responsible for all statements made in their work, including changes made by the copy editor.

6.2 Early View of Global Journals Inc. (US) (Publication Prior to Print)

The Global Journals Inc. (US) are enclosed by our publishing's Early View service. Early View articles are complete full-text articles sent in advance of their publication. Early View articles are absolute and final. They have been completely reviewed, revised and edited for publication, and the authors' final corrections have been incorporated. Because they are in final form, no changes can be made after sending them. The nature of Early View articles means that they do not yet have volume, issue or page numbers, so Early View articles cannot be cited in the conventional way.

6.3 Author Services

Online production tracking is available for your article through Author Services. Author Services enables authors to track their article - once it has been accepted - through the production process to publication online and in print. Authors can check the status of their articles online and choose to receive automated e-mails at key stages of production. The authors will receive an e-mail with a unique link that enables them to register and have their article automatically added to the system. Please ensure that a complete e-mail address is provided when submitting the manuscript.

6.4 Author Material Archive Policy

Please note that if not specifically requested, publisher will dispose off hardcopy & electronic information submitted, after the two months of publication. If you require the return of any information submitted, please inform the Editorial Board or dean as soon as possible.

6.5 Offprint and Extra Copies

A PDF offprint of the online-published article will be provided free of charge to the related author, and may be distributed according to the Publisher's terms and conditions. Additional paper offprint may be ordered by emailing us at: editor@globaljournals.org .

You must strictly follow above Author Guidelines before submitting your paper or else we will not at all be responsible for any corrections in future in any of the way.

Before start writing a good quality Computer Science Research Paper, let us first understand what is Computer Science Research Paper? So, Computer Science Research Paper is the paper which is written by professionals or scientists who are associated to Computer Science and Information Technology, or doing research study in these areas. If you are novel to this field then you can consult about this field from your supervisor or guide.

TECHNIQUES FOR WRITING A GOOD QUALITY RESEARCH PAPER:

1. Choosing the topic: In most cases, the topic is searched by the interest of author but it can be also suggested by the guides. You can have several topics and then you can judge that in which topic or subject you are finding yourself most comfortable. This can be done by asking several questions to yourself, like Will I be able to carry our search in this area? Will I find all necessary recourses to accomplish the search? Will I be able to find all information in this field area? If the answer of these types of questions will be "Yes" then you can choose that topic. In most of the cases, you may have to conduct the surveys and have to visit several places because this field is related to Computer Science and Information Technology. Also, you may have to do a lot of work to find all rise and falls regarding the various data of that subject. Sometimes, detailed information plays a vital role, instead of short information.

2. Evaluators are human: First thing to remember that evaluators are also human being. They are not only meant for rejecting a paper. They are here to evaluate your paper. So, present your Best.

3. Think Like Evaluators: If you are in a confusion or getting demotivated that your paper will be accepted by evaluators or not, then think and try to evaluate your paper like an Evaluator. Try to understand that what an evaluator wants in your research paper and automatically you will have your answer.

4. Make blueprints of paper: The outline is the plan or framework that will help you to arrange your thoughts. It will make your paper logical. But remember that all points of your outline must be related to the topic you have chosen.

5. Ask your Guides: If you are having any difficulty in your research, then do not hesitate to share your difficulty to your guide (if you have any). They will surely help you out and resolve your doubts. If you can't clarify what exactly you require for your work then ask the supervisor to help you with the alternative. He might also provide you the list of essential readings.

6. Use of computer is recommended: As you are doing research in the field of Computer Science, then this point is quite obvious.

7. Use right software: Always use good quality software packages. If you are not capable to judge good software then you can lose quality of your paper unknowingly. There are various software programs available to help you, which you can get through Internet.

8. Use the Internet for help: An excellent start for your paper can be by using the Google. It is an excellent search engine, where you can have your doubts resolved. You may also read some answers for the frequent question how to write my research paper or find model research paper. From the internet library you can download books. If you have all required books make important reading selecting and analyzing the specified information. Then put together research paper sketch out.

9. Use and get big pictures: Always use encyclopedias, Wikipedia to get pictures so that you can go into the depth.

10. Bookmarks are useful: When you read any book or magazine, you generally use bookmarks, right! It is a good habit, which helps to not to lose your continuity. You should always use bookmarks while searching on Internet also, which will make your search easier.

11. Revise what you wrote: When you write anything, always read it, summarize it and then finalize it.

12. Make all efforts: Make all efforts to mention what you are going to write in your paper. That means always have a good start. Try to mention everything in introduction, that what is the need of a particular research paper. Polish your work by good skill of writing and always give an evaluator, what he wants.

13. Have backups: When you are going to do any important thing like making research paper, you should always have backup copies of it either in your computer or in paper. This will help you to not to lose any of your important.

14. Produce good diagrams of your own: Always try to include good charts or diagrams in your paper to improve quality. Using several and unnecessary diagrams will degrade the quality of your paper by creating "hotchpotch." So always, try to make and include those diagrams, which are made by your own to improve readability and understandability of your paper.

15. Use of direct quotes: When you do research relevant to literature, history or current affairs then use of quotes become essential but if study is relevant to science then use of quotes is not preferable.

16. Use proper verb tense: Use proper verb tenses in your paper. Use past tense, to present those events that happened. Use present tense to indicate events that are going on. Use future tense to indicate future happening events. Use of improper and wrong tenses will confuse the evaluator. Avoid the sentences that are incomplete.

17. Never use online paper: If you are getting any paper on Internet, then never use it as your research paper because it might be possible that evaluator has already seen it or maybe it is outdated version.

18. Pick a good study spot: To do your research studies always try to pick a spot, which is quiet. Every spot is not for studies. Spot that suits you choose it and proceed further.

19. Know what you know: Always try to know, what you know by making objectives. Else, you will be confused and cannot achieve your target.

20. Use good quality grammar: Always use a good quality grammar and use words that will throw positive impact on evaluator. Use of good quality grammar does not mean to use tough words, that for each word the evaluator has to go through dictionary. Do not start sentence with a conjunction. Do not fragment sentences. Eliminate one-word sentences. Ignore passive voice. Do not ever use a big word when a diminutive one would suffice. Verbs have to be in agreement with their subjects. Prepositions are not expressions to finish sentences with. It is incorrect to ever divide an infinitive. Avoid clichés like the disease. Also, always shun irritating alliteration. Use language that is simple and straight forward. put together a neat summary.

21. Arrangement of information: Each section of the main body should start with an opening sentence and there should be a changeover at the end of the section. Give only valid and powerful arguments to your topic. You may also maintain your arguments with records.

22. Never start in last minute: Always start at right time and give enough time to research work. Leaving everything to the last minute will degrade your paper and spoil your work.

23. Multitasking in research is not good: Doing several things at the same time proves bad habit in case of research activity. Research is an area, where everything has a particular time slot. Divide your research work in parts and do particular part in particular time slot.

24. Never copy others' work: Never copy others' work and give it your name because if evaluator has seen it anywhere you will be in trouble.

25. Take proper rest and food: No matter how many hours you spend for your research activity, if you are not taking care of your health then all your efforts will be in vain. For a quality research, study is must, and this can be done by taking proper rest and food.

26. Go for seminars: Attend seminars if the topic is relevant to your research area. Utilize all your resources.

27. Refresh your mind after intervals: Try to give rest to your mind by listening to soft music or by sleeping in intervals. This will also improve your memory.

28. Make colleagues: Always try to make colleagues. No matter how sharper or intelligent you are, if you make colleagues you can have several ideas, which will be helpful for your research.

29. Think technically: Always think technically. If anything happens, then search its reasons, its benefits, and demerits.

30. Think and then print: When you will go to print your paper, notice that tables are not be split, headings are not detached from their descriptions, and page sequence is maintained.

31. Adding unnecessary information: Do not add unnecessary information, like, I have used MS Excel to draw graph. Do not add irrelevant and inappropriate material. These all will create superfluous. Foreign terminology and phrases are not apropos. One should NEVER take a broad view. Analogy in script is like feathers on a snake. Not at all use a large word when a very small one would be sufficient. Use words properly, regardless of how others use them. Remove quotations. Puns are for kids, not grunt readers. Amplification is a billion times of inferior quality than sarcasm.

32. Never oversimplify everything: To add material in your research paper, never go for oversimplification. This will definitely irritate the evaluator. Be more or less specific. Also too, by no means, ever use rhythmic redundancies. Contractions aren't essential and shouldn't be there used. Comparisons are as terrible as clichés. Give up ampersands and abbreviations, and so on. Remove commas, that are, not necessary. Parenthetical words however should be together with this in commas. Understatement is all the time the complete best way to put onward earth-shaking thoughts. Give a detailed literary review.

33. Report concluded results: Use concluded results. From raw data, filter the results and then conclude your studies based on measurements and observations taken. Significant figures and appropriate number of decimal places should be used. Parenthetical remarks are prohibitive. Proofread carefully at final stage. In the end give outline to your arguments. Spot out perspectives of further study of this subject. Justify your conclusion by at the bottom of them with sufficient justifications and examples.

34. After conclusion: Once you have concluded your research, the next most important step is to present your findings. Presentation is extremely important as it is the definite medium though which your research is going to be in print to the rest of the crowd. Care should be taken to categorize your thoughts well and present them in a logical and neat manner. A good quality research paper format is essential because it serves to highlight your research paper and bring to light all necessary aspects in your research.

Informal Guidelines of Research Paper Writing

Key points to remember:

- Submit all work in its final form.
- Write your paper in the form, which is presented in the guidelines using the template.
- Please note the criterion for grading the final paper by peer-reviewers.

Final Points:

A purpose of organizing a research paper is to let people to interpret your effort selectively. The journal requires the following sections, submitted in the order listed, each section to start on a new page.

The introduction will be compiled from reference matter and will reflect the design processes or outline of basis that direct you to make study. As you will carry out the process of study, the method and process section will be constructed as like that. The result segment will show related statistics in nearly sequential order and will direct the reviewers next to the similar intellectual paths throughout the data that you took to carry out your study. The discussion section will provide understanding of the data and projections as to the implication of the results. The use of good quality references all through the paper will give the effort trustworthiness by representing an alertness of prior workings.

Writing a research paper is not an easy job no matter how trouble-free the actual research or concept. Practice, excellent preparation, and controlled record keeping are the only means to make straightforward the progression.

General style:

Specific editorial column necessities for compliance of a manuscript will always take over from directions in these general guidelines.

To make a paper clear

· Adhere to recommended page limits

Mistakes to evade

- Insertion a title at the foot of a page with the subsequent text on the next page
- Separating a table/chart or figure - impound each figure/table to a single page
- Submitting a manuscript with pages out of sequence

In every sections of your document

· Use standard writing style including articles ("a", "the," etc.)

· Keep on paying attention on the research topic of the paper

· Use paragraphs to split each significant point (excluding for the abstract)

· Align the primary line of each section

· Present your points in sound order

· Use present tense to report well accepted

· Use past tense to describe specific results

· Shun familiar wording, don't address the reviewer directly, and don't use slang, slang language, or superlatives

· Shun use of extra pictures - include only those figures essential to presenting results

Title Page:

Choose a revealing title. It should be short. It should not have non-standard acronyms or abbreviations. It should not exceed two printed lines. It should include the name(s) and address (es) of all authors.

Abstract:

The summary should be two hundred words or less. It should briefly and clearly explain the key findings reported in the manuscript--must have precise statistics. It should not have abnormal acronyms or abbreviations. It should be logical in itself. Shun citing references at this point.

An abstract is a brief distinct paragraph summary of finished work or work in development. In a minute or less a reviewer can be taught the foundation behind the study, common approach to the problem, relevant results, and significant conclusions or new questions.

Write your summary when your paper is completed because how can you write the summary of anything which is not yet written? Wealth of terminology is very essential in abstract. Yet, use comprehensive sentences and do not let go readability for briefness. You can maintain it succinct by phrasing sentences so that they provide more than lone rationale. The author can at this moment go straight to shortening the outcome. Sum up the study, with the subsequent elements in any summary. Try to maintain the initial two items to no more than one ruling each.

- Reason of the study - theory, overall issue, purpose
- Fundamental goal
- To the point depiction of the research
- Consequences, including definite statistics - if the consequences are quantitative in nature, account quantitative data; results of any numerical analysis should be reported
- Significant conclusions or questions that track from the research(es)

Approach:

- Single section, and succinct
- As a outline of job done, it is always written in past tense
- A conceptual should situate on its own, and not submit to any other part of the paper such as a form or table
- Center on shortening results - bound background information to a verdict or two, if completely necessary
- What you account in an conceptual must be regular with what you reported in the manuscript
- Exact spelling, clearness of sentences and phrases, and appropriate reporting of quantities (proper units, important statistics) are just as significant in an abstract as they are anywhere else

Introduction:

The **Introduction** should "introduce" the manuscript. The reviewer should be presented with sufficient background information to be capable to comprehend and calculate the purpose of your study without having to submit to other works. The basis for the study should be offered. Give most important references but shun difficult to make a comprehensive appraisal of the topic. In the introduction, describe the problem visibly. If the problem is not acknowledged in a logical, reasonable way, the reviewer will have no attention in your result. Speak in common terms about techniques used to explain the problem, if needed, but do not present any particulars about the protocols here. Following approach can create a valuable beginning:

- Explain the value (significance) of the study
- Shield the model - why did you employ this particular system or method? What is its compensation? You strength remark on its appropriateness from a abstract point of vision as well as point out sensible reasons for using it.
- Present a justification. Status your particular theory (es) or aim(s), and describe the logic that led you to choose them.
- Very for a short time explain the tentative propose and how it skilled the declared objectives.

Approach:

- Use past tense except for when referring to recognized facts. After all, the manuscript will be submitted after the entire job is done.
- Sort out your thoughts; manufacture one key point with every section. If you make the four points listed above, you will need a least of four paragraphs.

- Present surroundings information only as desirable in order hold up a situation. The reviewer does not desire to read the whole thing you know about a topic.
- Shape the theory/purpose specifically - do not take a broad view.
- As always, give awareness to spelling, simplicity and correctness of sentences and phrases.

Procedures (Methods and Materials):

This part is supposed to be the easiest to carve if you have good skills. A sound written Procedures segment allows a capable scientist to replacement your results. Present precise information about your supplies. The suppliers and clarity of reagents can be helpful bits of information. Present methods in sequential order but linked methodologies can be grouped as a segment. Be concise when relating the protocols. Attempt for the least amount of information that would permit another capable scientist to spare your outcome but be cautious that vital information is integrated. The use of subheadings is suggested and ought to be synchronized with the results section. When a technique is used that has been well described in another object, mention the specific item describing a way but draw the basic principle while stating the situation. The purpose is to text all particular resources and broad procedures, so that another person may use some or all of the methods in one more study or referee the scientific value of your work. It is not to be a step by step report of the whole thing you did, nor is a methods section a set of orders.

Materials:

- Explain materials individually only if the study is so complex that it saves liberty this way.
- Embrace particular materials, and any tools or provisions that are not frequently found in laboratories.
- Do not take in frequently found.
- If use of a definite type of tools.
- Materials may be reported in a part section or else they may be recognized along with your measures.

Methods:

- Report the method (not particulars of each process that engaged the same methodology)
- Describe the method entirely
- To be succinct, present methods under headings dedicated to specific dealings or groups of measures
- Simplify - details how procedures were completed not how they were exclusively performed on a particular day.
- If well known procedures were used, account the procedure by name, possibly with reference, and that's all.

Approach:

- It is embarrassed or not possible to use vigorous voice when documenting methods with no using first person, which would focus the reviewer's interest on the researcher rather than the job. As a result when script up the methods most authors use third person passive voice.
- Use standard style in this and in every other part of the paper - avoid familiar lists, and use full sentences.

What to keep away from

- Resources and methods are not a set of information.
- Skip all descriptive information and surroundings - save it for the argument.
- Leave out information that is immaterial to a third party.

Results:

The principle of a results segment is to present and demonstrate your conclusion. Create this part a entirely objective details of the outcome, and save all understanding for the discussion.

The page length of this segment is set by the sum and types of data to be reported. Carry on to be to the point, by means of statistics and tables, if suitable, to present consequences most efficiently.You must obviously differentiate material that would usually be incorporated in a study editorial from any unprocessed data or additional appendix matter that would not be available. In fact, such matter should not be submitted at all except requested by the instructor.

Content

- Sum up your conclusion in text and demonstrate them, if suitable, with figures and tables.
- In manuscript, explain each of your consequences, point the reader to remarks that are most appropriate.
- Present a background, such as by describing the question that was addressed by creation an exacting study.
- Explain results of control experiments and comprise remarks that are not accessible in a prescribed figure or table, if appropriate.
- Examine your data, then prepare the analyzed (transformed) data in the form of a figure (graph), table, or in manuscript form.

What to stay away from

- Do not discuss or infer your outcome, report surroundings information, or try to explain anything.
- Not at all, take in raw data or intermediate calculations in a research manuscript.
- Do not present the similar data more than once.
- Manuscript should complement any figures or tables, not duplicate the identical information.
- Never confuse figures with tables - there is a difference.

Approach

- As forever, use past tense when you submit to your results, and put the whole thing in a reasonable order.
- Put figures and tables, appropriately numbered, in order at the end of the report
- If you desire, you may place your figures and tables properly within the text of your results part.

Figures and tables

- If you put figures and tables at the end of the details, make certain that they are visibly distinguished from any attach appendix materials, such as raw facts
- Despite of position, each figure must be numbered one after the other and complete with subtitle
- In spite of position, each table must be titled, numbered one after the other and complete with heading
- All figure and table must be adequately complete that it could situate on its own, divide from text

Discussion:

The Discussion is expected the trickiest segment to write and describe. A lot of papers submitted for journal are discarded based on problems with the Discussion. There is no head of state for how long a argument should be. Position your understanding of the outcome visibly to lead the reviewer through your conclusions, and then finish the paper with a summing up of the implication of the study. The purpose here is to offer an understanding of your results and hold up for all of your conclusions, using facts from your research and generally accepted information, if suitable. The implication of result should be visibly described. Infer your data in the conversation in suitable depth. This means that when you clarify an observable fact you must explain mechanisms that may account for the observation. If your results vary from your prospect, make clear why that may have happened. If your results agree, then explain the theory that the proof supported. It is never suitable to just state that the data approved with prospect, and let it drop at that.

- Make a decision if each premise is supported, discarded, or if you cannot make a conclusion with assurance. Do not just dismiss a study or part of a study as "uncertain."
- Research papers are not acknowledged if the work is imperfect. Draw what conclusions you can based upon the results that you have, and take care of the study as a finished work
- You may propose future guidelines, such as how the experiment might be personalized to accomplish a new idea.
- Give details all of your remarks as much as possible, focus on mechanisms.
- Make a decision if the tentative design sufficiently addressed the theory, and whether or not it was correctly restricted.
- Try to present substitute explanations if sensible alternatives be present.
- One research will not counter an overall question, so maintain the large picture in mind, where do you go next? The best studies unlock new avenues of study. What questions remain?
- Recommendations for detailed papers will offer supplementary suggestions.

Approach:

- When you refer to information, differentiate data generated by your own studies from available information
- Submit to work done by specific persons (including you) in past tense.
- Submit to generally acknowledged facts and main beliefs in present tense.

The Administration Rules

Please carefully note down following rules and regulation before submitting your Research Paper to Global Journals Inc. (US):

Segment Draft and Final Research Paper: You have to strictly follow the template of research paper. If it is not done your paper may get rejected.

- The **major constraint** is that you must independently make all content, tables, graphs, and facts that are offered in the paper. You must write each part of the paper wholly on your own. The Peer-reviewers need to identify your own perceptive of the concepts in your own terms. NEVER extract straight from any foundation, and never rephrase someone else's analysis.

- Do not give permission to anyone else to "PROOFREAD" your manuscript.

- Methods to avoid Plagiarism is applied by us on every paper, if found guilty, you will be blacklisted by all of our collaborated research groups, your institution will be informed for this and strict legal actions will be taken immediately.)
- To guard yourself and others from possible illegal use please do not permit anyone right to use to your paper and files.

Criterion for Grading a Research Paper (Compilation) by Global Journals Inc. (US)

Please note that following table is only a Grading of "Paper Compilation" and not on "Performed/Stated Research" whose grading solely depends on Individual Assigned Peer Reviewer and Editorial Board Member. These can be available only on request and after decision of Paper. This report will be the property of Global Journals Inc. (US).

Topics	Grades		
	A-B	**C-D**	**E-F**
Abstract	Clear and concise with appropriate content, Correct format. 200 words or below	Unclear summary and no specific data, Incorrect form Above 200 words	No specific data with ambiguous information Above 250 words
Introduction	Containing all background details with clear goal and appropriate details, flow specification, no grammar and spelling mistake, well organized sentence and paragraph, reference cited	Unclear and confusing data, appropriate format, grammar and spelling errors with unorganized matter	Out of place depth and content, hazy format
Methods and Procedures	Clear and to the point with well arranged paragraph, precision and accuracy of facts and figures, well organized subheads	Difficult to comprehend with embarrassed text, too much explanation but completed	Incorrect and unorganized structure with hazy meaning
Result	Well organized, Clear and specific, Correct units with precision, correct data, well structuring of paragraph, no grammar and spelling mistake	Complete and embarrassed text, difficult to comprehend	Irregular format with wrong facts and figures
Discussion	Well organized, meaningful specification, sound conclusion, logical and concise explanation, highly structured paragraph reference cited	Wordy, unclear conclusion, spurious	Conclusion is not cited, unorganized, difficult to comprehend
References	Complete and correct format, well organized	Beside the point, Incomplete	Wrong format and structuring

Index

B

Bovespa's · 36

I

Incentivize · 3

L

Laitinen · 61, 63

P

Promulgation · 4

R

Ramifications · 12
Rothschild · 33

S

Stiglitz · 33

Z

Zeckhauser · 33

save our planet

Global Journal of Management and Business Research

Visit us on the Web at www.GlobalJournals.org | www.JournalofBusiness.Org
or email us at helpdesk@globaljournals.org

ISSN 9755853

© Global Journals